CANNON

MAG 5 HS™

1902050

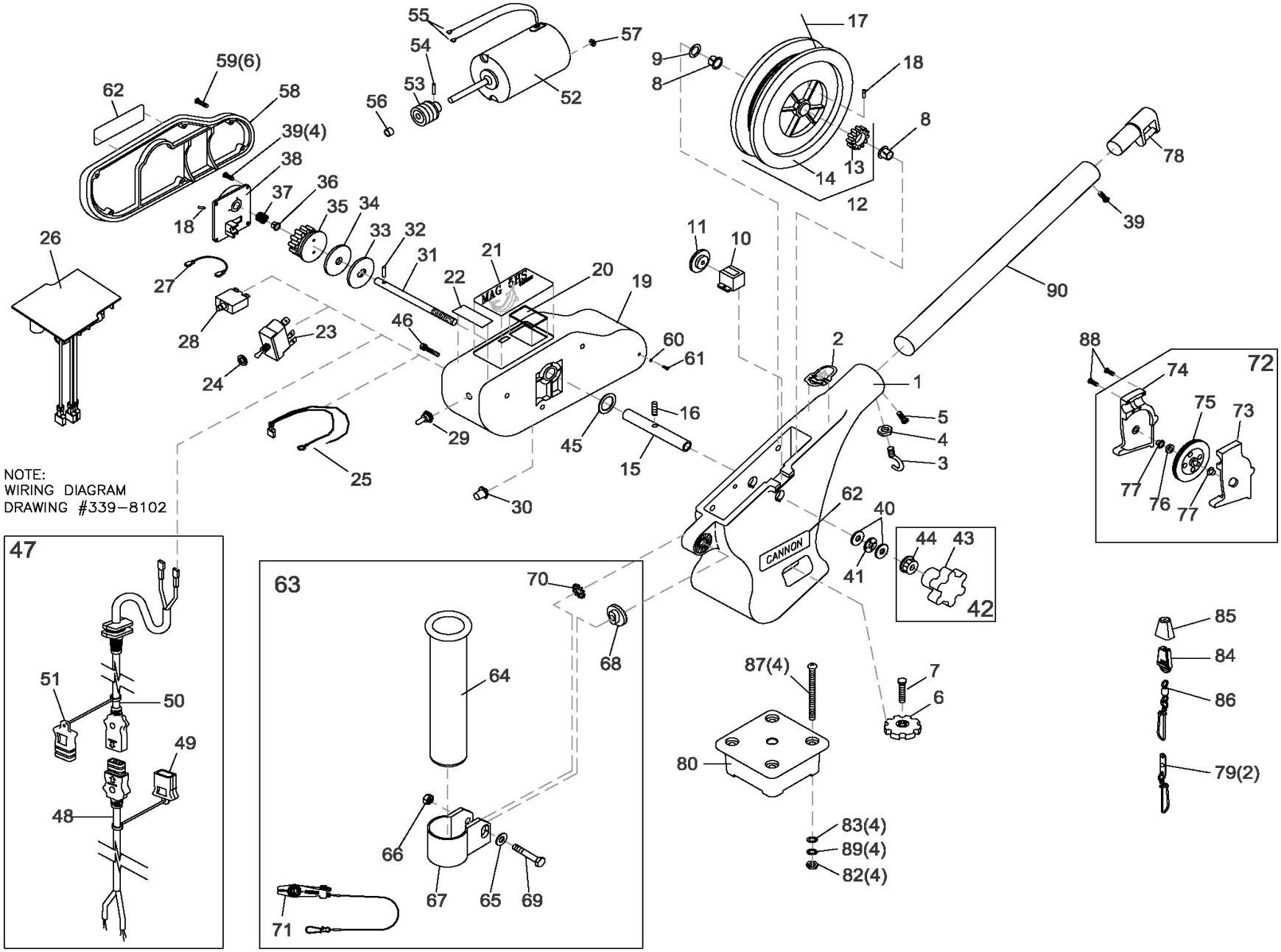

In the U.S.A., replacement parts may be ordered directly from CANNON Parts Dept., 121 Power Drive, Mankato, Minnesota 56001. In Canada, parts may be ordered from any of the Canadian Authorized Service Centers shown on the enclosed list. Be sure to provide the MODEL and SERIAL numbers of your downrigger when ordering parts. Please use the correct part numbers from the parts list. Payment for any parts ordered from the CANNON parts department, may be by cash, personal check, Discover Card, MasterCard or VISA. To order, call 1-800-227-6433 or FAX 1-800-527-4464.

1	3392500	FRAME - LARGE BLACK (LEXAN)
2	4427005	NOSE DECAL MAGNUM
3	9040040	HOOK - 1/4" - 20 ROLLED
4	2263102	NUT - HEX 1/4"-20
5	9280750	SCREW - 1/4" - 20 (RH) x 3/4" PPH
6	0849615	BASE LOCK KNOB
7	9040340	BOLT - 3/8"-16 X 1-1/2" HEX
8	9010001	BEARING - REEL SHAFT NYLINER [2.EA]
9	9430210	WASHER - 1-1/16" OD X 7/8" ID (NYLON)
10	0220477	DEPTH COUNTER - 3 DIGIT
11	0833561	GEAR - COUNTER
12	0274000	REEL ASSEMBLY - HS ELECTRIC
13	0233560	>GEAR REEL
14	0274731	►REEL - MACHINED 3.75"
15	1480071	SHAFT - REEL
16	9340131	SCREW - SET 5/16"-18 x 1-3/4" (REEL)
17	3775394	SPOOL CABLE SS [250.FT]
18	9100070	CABLE LEADER SLEEVE [2.EA]
19	3396552	MOTOR HOUSING - MAG 5 (LEXAN)
20	1497071	LENSE - WINDOW DISPLAY
21	3395612	DECAL - LARGE, MAG 5 HS
22	3395702	DECAL - POSITIVE ION CONTROL
23	2286792	SWITCH - UP/DN CONTROL
24	2286793	WASHER - SHIM .750 x .1 UP/DN SWITCH
25	050176	CABLE ASSY - MAG 5 (SHORT STOP)
26	050175	CONTROL BOARD - MAG 5
27	1296831	WIRE - CIRCUIT BREAKER JUMPER (RED)
28	3398205	CIRCUIT BREAKER - 30 AMP
29	1221490	UP/DN SWITCH BOOT
30	1221491	CIRCUIT BREAKER BOOT
31	1480070	SHAFT - DRIVE
32	9250002	PIN - DRIVE SHAFT 3/16" ROLL SS
33	0467695	BRAKE PLATE - REEL
34	1264670	CLUTCH PAD
35	1433074	GEAR - DRIVER WORM
36	9010003	BEARING - DRIVE SHAFT NYLINER
37	9400005	SPRING - SHAFT CONTACT
38	4421002	COVER - GEAR CASE
39	2372100	SCREW - #8 x 5/8" PPHMS [5.EA]
40	9010310	WASHER - THRUST [2.EA]
41	9010280	BEARING - THRUST
42	2998906	KNOB BRAKE
43	0649001	►KNOB - HAND ADJUST
44	9130390	►NUT - KNURLED INSERT 3/8"-24
45	1479070	O-RING - REEL SHAFT
46	9370205	SCREW - 1/4" x 3/4" HEX WASH HD [3.EA]
47	3993200	POWER CABLE ASSEMBLY
48	3393200	>POWER CABLE - BATTERY
49	3393201	>CAP - POWER CABLE - BATTERY
50	3393202	>POWER CABLE - MOTOR
51	3393210	>CAP - POWER CABLE -MOTOR
52	1458001	MOTOR 12V DC
53	1497070	GEAR - WORM MOTOR
54	9250001	PIN - MOTOR, 3/32" X 3/4" ROLL SS
55	700032	TERMINAL - MOTOR, FEM 12-10 [2.EA]
56	9010002	BEARING - MOTOR SHAFT
57	2263112	NUT - HEX #10-32 BZ
58	1421070	COVER - MOTOR HOUSING (LEXAN)
59	3393400	SCREW - #8-18 x 1-1/4" PPHSMS SS [6.EA]
60	701007	O-RING - SMALL
61	2332103	SCREW-#6-20 X 3/8"
62	3395630	DECAL - CANNON LARGE [2.EA]
63	2477001	BAG ASSY - SINGLE ROD HOLDER
64	0290796	>TUBE - ROD HOLDER
65	2151726	>WASHER - 5/16" FLAT
66	2383106	>NUT - 5/16"-18 SS
67	3319005	>CLAMP - ROD HOLDER w/ SLOT
68	3325002	>DISK - ROD HOLDER
69	9040310	>BOLT - HEX 5/16"-18 x 2"
70	9430160	>WASHER - STAR 5/16"
71	2277002	>UNIVERSAL LINE RELEASE
72	3992300	SWIVEL HEAD ASSEMBLY
73	0267001	►SIDE PLATE (RH)
74	0267002	►SIDE PLATE (LH)
75	0269726	►PULLY - SWIVEL HEAD
76	3397300	►WASHER - .735 OD X .36 ID
77	9010070	►HDW BEARING BRASS[2.EA]
78	2216403	BOOM END (LEXAN)
79	2200148	SNAP & INSULATOR [2.EA]
80	1007334	MOUNTING BASE (LEXAN)
81	2994892	*BAG ASSEMBLY, MOUNTING (KIT #2)
82	2263102	NUT - HEX 1/4"-20 [4.EA]
83	2371712	WASHER - 9/32" FLAT [4.EA]
84	9100100	TERMINATOR
85	9100101	TERMINATOR CUSHION
86	9100620	TERMINATOR SNAP & SWIVEL
87	9280730	BOLT - TRUSS 1/4" - 20 x 4" [4.EA]
88	9370010	SCREW - #4 x 1/2" PPH [3.EA]
89	9950357	WASHER - LOCK 1/4" SPLIT [4.EA]
90	2290828	24" BOOM - HEAVY DUTY

> PART OF ASSEMBLY

►ITEM CANNOT BE SOLD SEPARATELY

* PARTS USED BUT NOT SHOWN