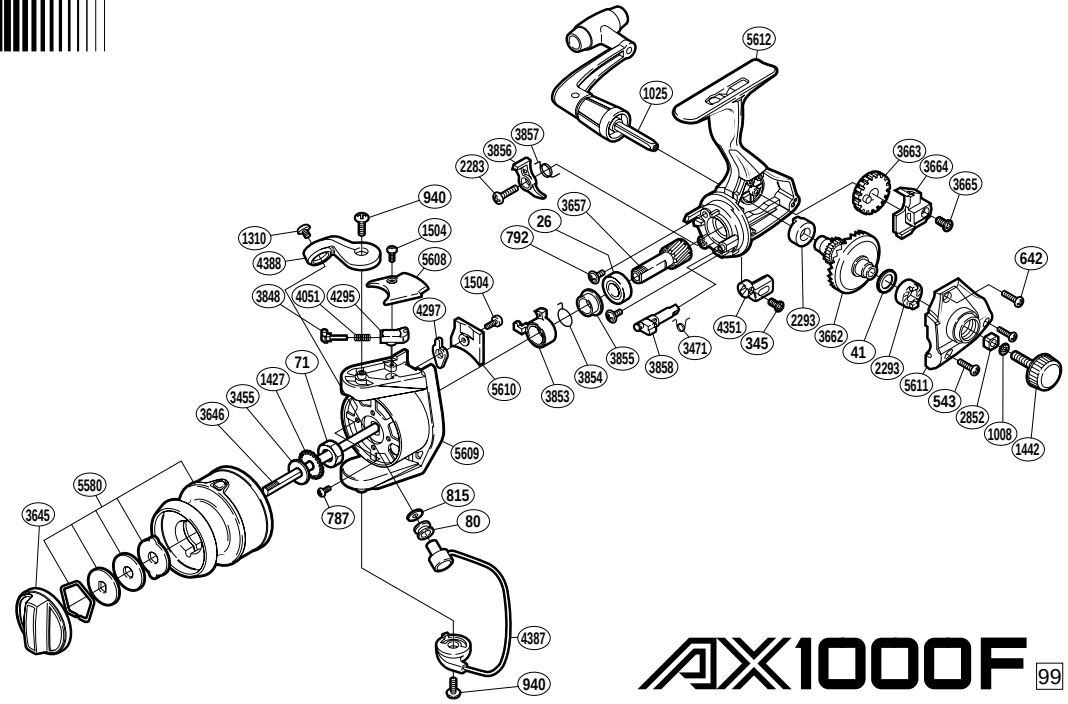

AX1000F

RD No.	PARTS NAMES	RD No.	PARTS NAMES	RD No.	PARTS NAMES
0026	Ball Bearing	1504	Multi-Purpose Screw	3855	Lock Out Spring Holder
0041	Drive Gear Washer	2283	Anti-Reverse Pawl Screw	3856	Anti-Reverse Pawl
0071	Rotor Nut	2293	Drive Gear Bushing	3857	Anti-Reverse Pawl Spring
0080	Line Roller	2852	Handle Screw Lock	3858	Anti-Reverse Cam
0345	Anti-Reverse Lever Screw	3455	Spool Washer	4051	Bail Spring
0543	Side Cover Screw (black)	3471	Anti-Reverse Cam Spring	4295	Bail Spring Guide (B)
0642	Side Cover Screw (silver)	3645	Drag Knob	4297	Bail Trip Lever
0787	Nut Lock Screw	3646	Main Shaft	4351	Anti-Reverse Lever
0792	Bearing Retainer Screw	3657	Pinion Gear	4387	Bail Assembly
0815	Line Roller Washer	3662	Drive Gear	4388	Bail Arm
0940	Multi-Purpose Screw	3663	Oscillating Gear	5580	Spool Assembly
1008	Handle Lock Washer	3664	Oscillating Slider	5608	Bail Spring Cover
1025	Handle Assembly	3665	Slider Retainer Screw	5609	Rotor
1310	Line Roller Screw	3848	Bail Spring Guide (A)	5610	Counterbalance Cover
1427	Spool Support	3853	Anti-Reverse Lock Out	5611	Side Cover
1442	Handle Screw Cap	3854	Anti-Reverse Lock Out Spring	5612	Body

(100803)