SHIMANO

CALCUTTA S A-RB

CT-300D

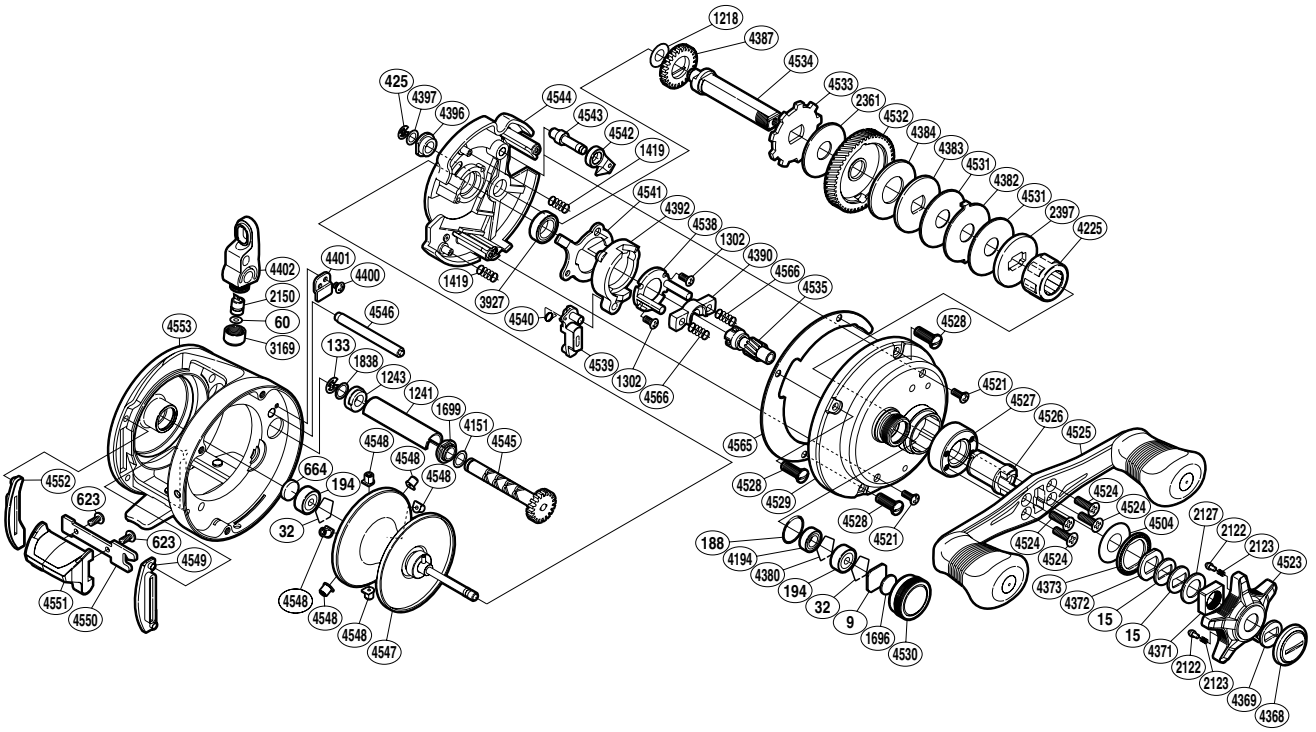

(1RH318300U)

Please note that the number of adjusting washers may not be the same as shown in the exploded views. (Adjustment will vary with each individual product.)

Part No.	Description	Part No.	Description	Part No.	Description
BNT0009	Spacer	BNT4194	Ball Bearing	BNT4529	Right Side Plate
BNT0015	Drag Spring Washer	BNT4225	Roller Clutch Bearing	BNT4530	Cast Control Cap
BNT0032	Bearing Retainer	BNT4368	Handle Bolt	BNT4531	Drag Washer
BNT0060	Spacer	BNT4369	Handle Lock Spring	BNT4532	Drive Gear
BNT0133	E Lock	BNT4371	Star Drag Nut	BNT4533	Anti-Reverse Ratchet
BNT0188	O Ring	BNT4372	Drive Shaft Shield	BNT4534	Drive Shaft
BNT0194	Ball Bearing	BNT4373	Star Drag Click Plate	BNT4535	Pinion Gear
BNT0425	E Lock	BNT4380	Retainer	BNT4538	Clutch Cam Retainer
BNT0623	Screw	BNT4382	Eared Washer	BNT4539	Clutch Pawl
BNT0664	Spacer B	BNT4383	Key Washer	BNT4540	Clutch Pawl Spring
BNT1218	Spacer	BNT4384	Drag Washer	BNT4541	Clutch Plate
BNT1241	Level Wind Guard	BNT4387	Idle Gear	BNT4542	Anti-Reverse Pawl
BNT1243	Worm Bushing B	BNT4390	Yoke	BNT4543	Anti-Reverse Pawl Pin
BNT1302	Screw	BNT4392	Clutch Cam	BNT4544	Set Plate
BNT1419	Spring	BNT4396	Drive Shaft Bushing	BNT4545	Worm Shaft
BNT1696	Cast Control Spacer	BNT4397	Washer	BNT4546	Level Wind Guide
BNT1699	Worm Bushing A	BNT4400	Screw	BNT4547	Spool Assembly
BNT1838	Spacer	BNT4401	Worm Bushing Retainer	BNT4548	Brake Collar
BNT2122	Click Pin	BNT4402	Line Guide	BNT4549	Clutch Bar Guide B
BNT2123	Click Spring	BNT4504	Washer	BNT4550	Clutch Plate B
BNT2127	Star Drag Spacer	BNT4521	Screw	BNT4551	Quick-Fire II Clutch Bar
BNT2150	Line Guide Pawl	BNT4523	Star Drag	BNT4552	Clutch Bar Guide A
BNT2361	Drag Washer	BNT4524	Screw	BNT4553	One-Piece Frame
BNT2397	Key Washer	BNT4525	Handle Assembly	BNT4565	Side Plate Support
BNT3169	Pawl Cap	BNT4526	Roller Clutch Inner Tube	BNT4566	Yoke Spring
BNT3927	Ball Bearing	BNT4527	Handle Plate		
BNT4151	Washer	BNT4528	Screw		