SHIMANO®

CARDIFF A-RB

CDF-201A

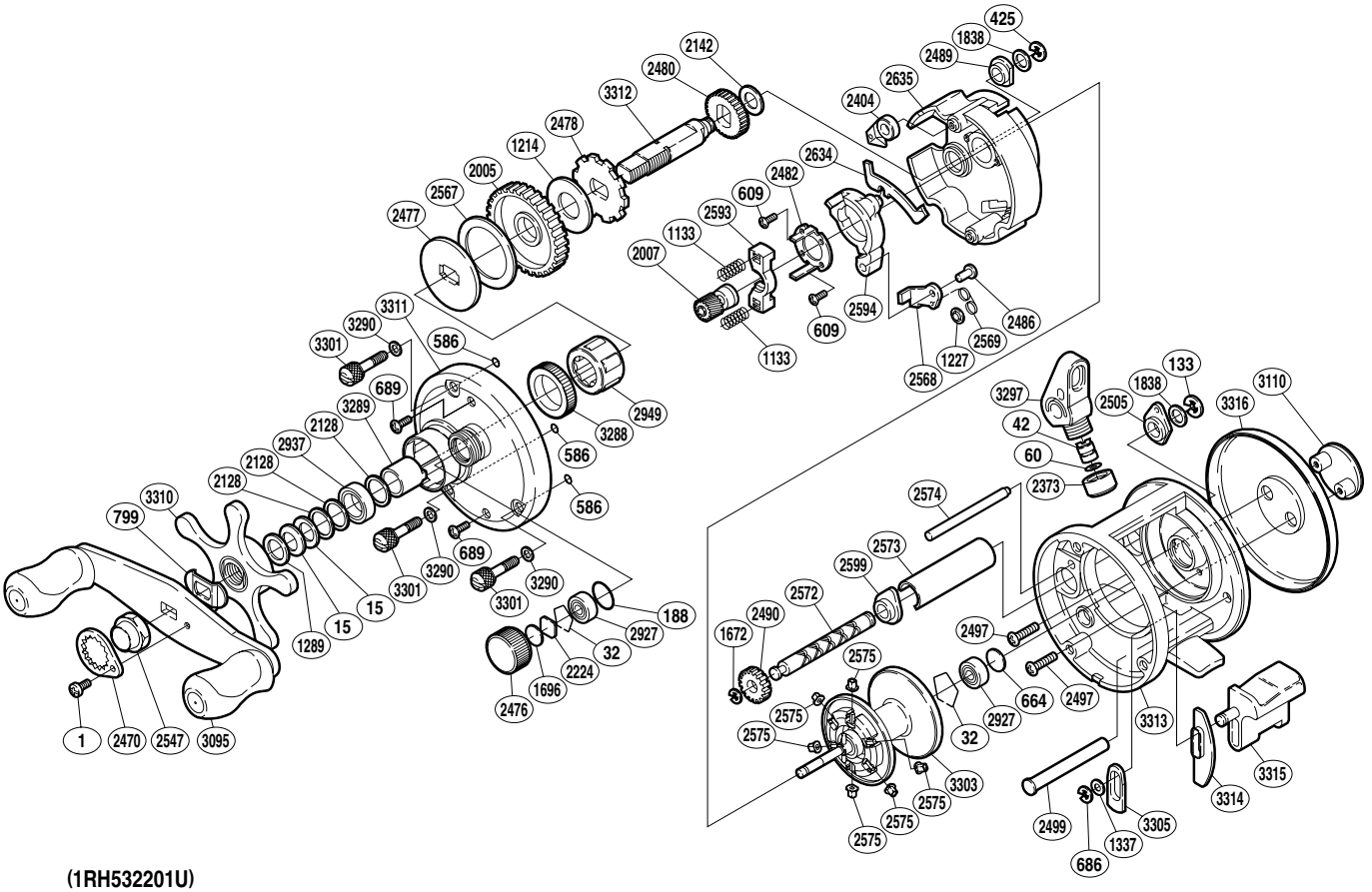

(1RH532201U)

Part No.	Description	Part No.	Description	Part No.	Description
BNT0001	Screw	BNT2142	Idle Gear A Spacer	BNT2632	Clutch Pawl
BNT0015	Drag Spring Washer	BNT2224	Spool Tension Spacer A	BNT2633	Clutch Pawl Spring
BNT0032	Bearing Retainer	BNT2373	Pawl Cap	BNT2634	Clutch Plate
BNT0042	Line Guide Pawl	BNT2404	Anti-Reverse Pawl	BNT2635	Set Plate
BNT0060	Spacer	BNT2470	Handle Nut Plate	BNT2927	Ball Bearing
BNT0133	E Lock	BNT2476	Cast Control Cap	BNT2937	Ball Bearing
BNT0188	O Ring	BNT2477	Key Washer	BNT2949	Roller Clutch Bearing
BNT0425	E Lock	BNT2478	Anti-Reverse Ratchet	BNT3095	Handle Assembly
BNT0586	Bolt Retainer	BNT2480	Idle Gear A	BNT3110	Side I.D. Plate
BNT0609	Screw	BNT2482	Clutch Cam Retainer	BNT3288	Drive Shaft Holder Bushing
BNT0664	Spacer B	BNT2486	Clutch Pawl Pin	BNT3289	Roller Clutch Inner Tube
BNT0686	E Lock	BNT2489	Drive Shaft Bushing	BNT3290	Washer
BNT0689	Screw	BNT2490	Idle Gear C	BNT3297	Line Guide
BNT0799	Friction Washer	BNT2497	Screw	BNT3301	Side Plate Nut
BNT1133	Yoke Spring	BNT2499	Clutch Bar Support	BNT3303	Spool Assembly
BNT1214	Drag Washer A	BNT2505	Worm Bushing B	BNT3305	Clutch Bar Guide A
BNT1227	Push Nut (SPN-2)	BNT2547	Handle Nut	BNT3310	Star Drag
BNT1289	Star Drag Spacer	BNT2567	Drag Washer C	BNT3311	Left Side Plate
BNT1337	Spacer	BNT2572	Worm Shaft	BNT3312	Drive Shaft
BNT1672	E Lock	BNT2573	Level Wind Guard	BNT3313	One-Piece Frame
BNT1696	Cast Control Spacer B	BNT2574	Level Wind Guide	BNT3314	Clutch Bar Guide B
BNT1838	Spacer	BNT2575	Brake Collar	BNT3315	Quick-Fire II Clutch Bar
BNT2005	Drive Gear	BNT2593	Yoke	BNT3316	Right Side Plate
BNT2007	Pinion Gear	BNT2594	Clutch Cam		
BNT2128	Bearing Washer	BNT2599	Worm Bushing A		

(160818)