SHIMANO®

CARDIFF A-RB

CDF-300A

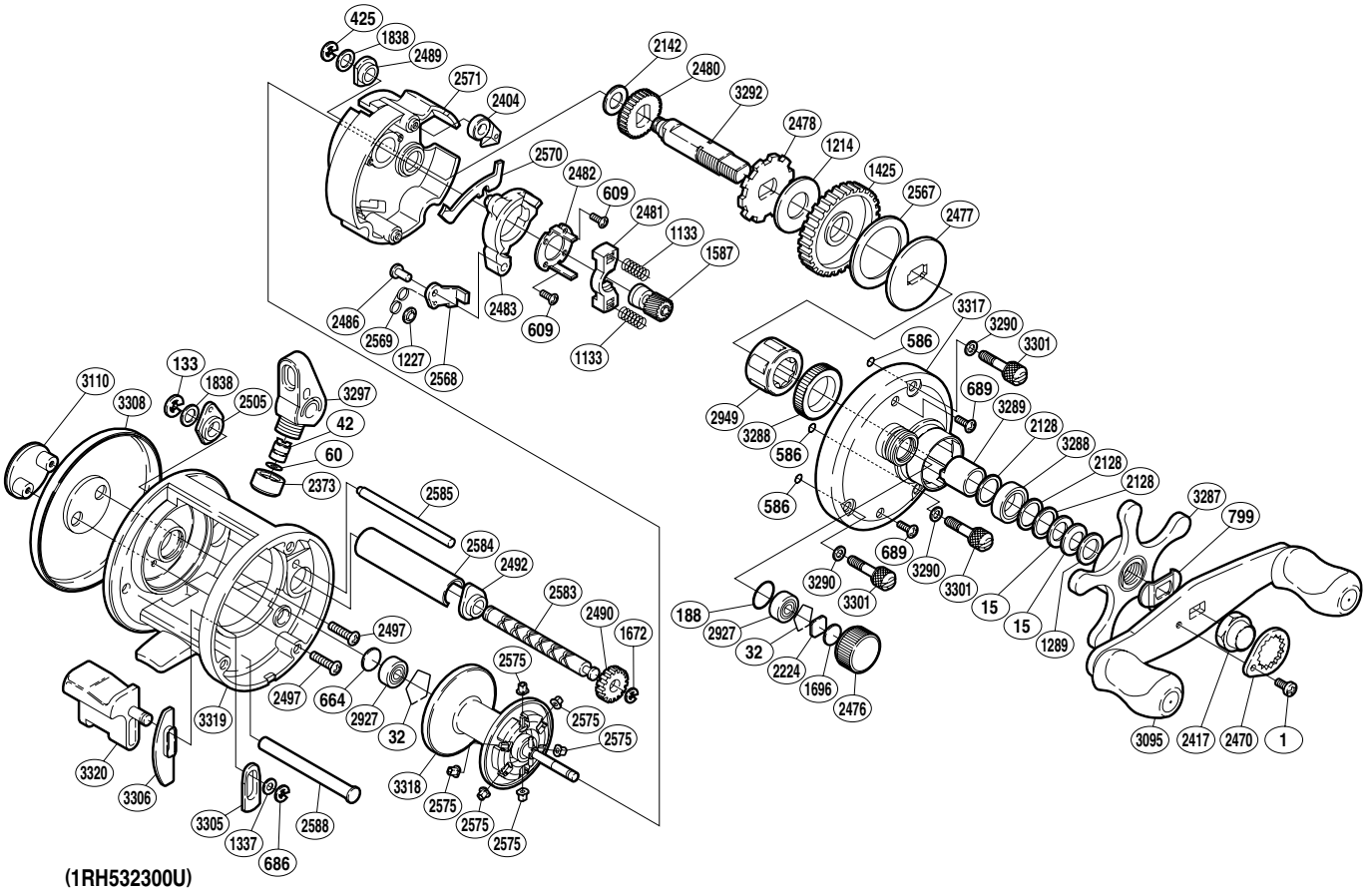

(1RH532300U)

Part No.	Description	Part No.	Description	Part No.	Description
BNT0001	Screw	BNT2142	Idle Gear A Spacer	BNT2583	Worm Shaft
BNT0015	Drag Spring Washer	BNT2224	Spool Tension Spacer A	BNT2584	Level Wind Guard
BNT0032	Bearing Retainer	BNT2373	Pawl Cap	BNT2585	Level Wind Guide
BNT0042	Line Guide Pawl	BNT2404	Anti-Reverse Pawl	BNT2588	Clutch Bar Support
BNT0060	Spacer	BNT2417	Handle Nut	BNT2927	Ball Bearing
BNT0133	E Lock	BNT2470	Handle Nut Plate	BNT2937	Ball Bearing
BNT0188	O Ring	BNT2476	Cast Control Cap	BNT2949	Roller Clutch Bearing
BNT0425	E Lock	BNT2477	Key Washer	BNT3095	Handle Assembly
BNT0586	Bolt Retainer	BNT2478	Anti-Reverse Ratchet	BNT3110	Side I.D. Plate
BNT0609	Screw	BNT2480	Idle Gear A	BNT3287	Star Drag
BNT0664	Spacer B	BNT2481	Yoke	BNT3288	Drive Shaft Holder Bushing
BNT0686	E Lock	BNT2482	Clutch Cam Retainer	BNT3289	Roller Clutch Inner Tube
BNT0689	Screw	BNT2483	Clutch Cam	BNT3290	Washer
BNT0799	Friction Washer	BNT2486	Clutch Pawl Pin	BNT3292	Drive Shaft
BNT1133	Yoke Spring	BNT2489	Drive Shaft Bushing	BNT3297	Line Guide
BNT1214	Drag Washer A	BNT2490	Idle Gear C	BNT3301	Side Plate Nut
BNT1227	Push Nut (SPN-2)	BNT2492	Worm Bushing A	BNT3305	Clutch Bar Guide A
BNT1289	Star Drag Spacer	BNT2497	Screw	BNT3306	Clutch Bar Guide B
BNT1337	Spacer	BNT2505	Worm Bushing B	BNT3308	Left Side Plate
BNT1425	Drive Gear	BNT2567	Drag Washer C	BNT3317	Right Side Plate
BNT1587	Pinion Gear	BNT2568	Clutch Pawl	BNT3318	Spool Assembly
BNT1672	E Lock	BNT2569	Clutch Pawl Spring	BNT3319	One-Piece Frame
BNT1696	Cast Control Spacer B	BNT2570	Clutch Plate	BNT3320	Quick-Fire II Clutch Bar
BNT1838	Spacer	BNT2571	Set Plate		
BNT2128	Bearing Washer	BNT2575	Brake Collar		