SHIMANO®

CARDIFF A-RB

CDF-400A

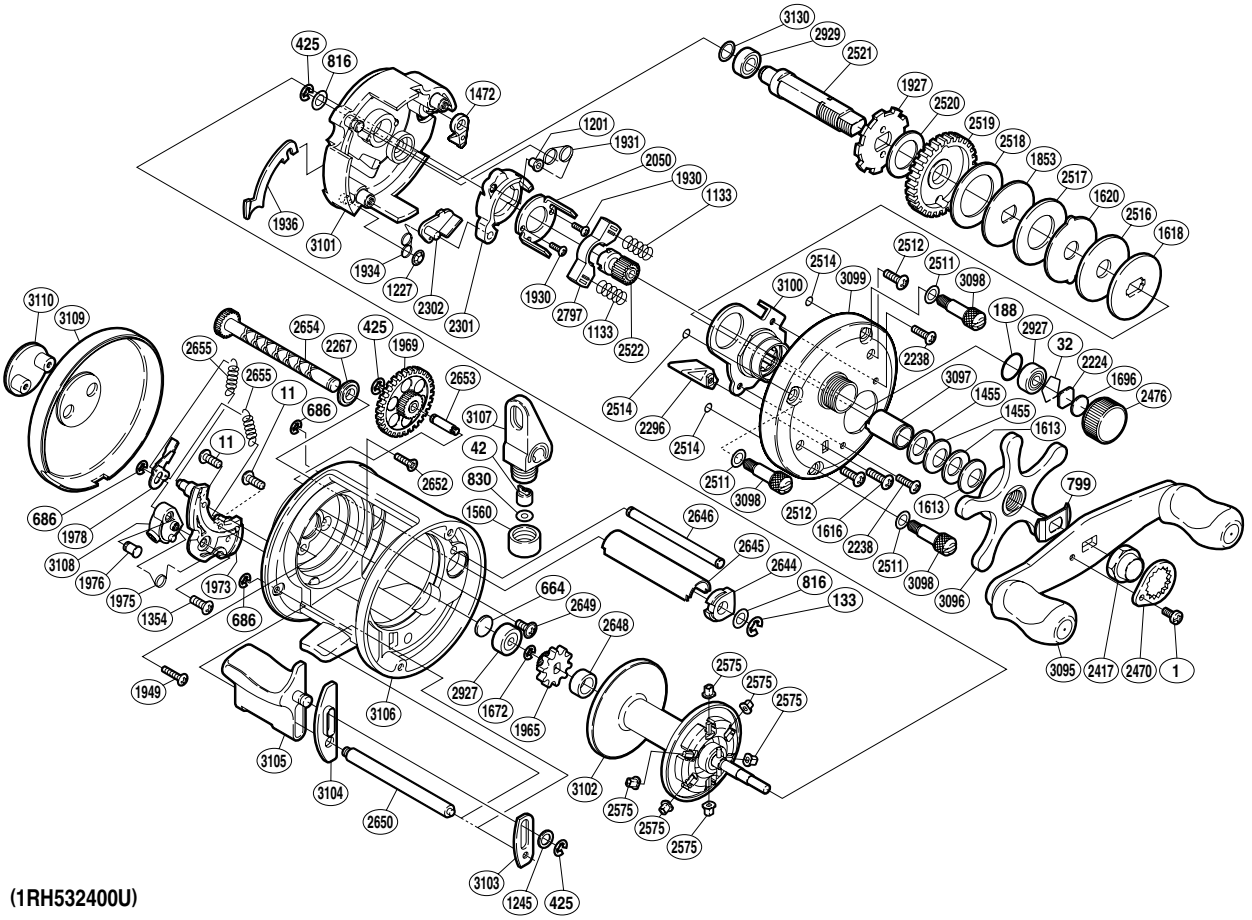

(1RH532400U)

Part No.	Description	Part No.	Description	Part No.	Description
BNT0001	Screw	BNT1934	Clutch Pawl Spring	BNT2644	Worm Bushing A
BNT0011	Screw	BNT1936	Clutch Plate	BNT2645	Level Wind Guard
BNT0032	Bearing Retainer	BNT1949	Screw	BNT2646	Stabilizer Bar
BNT0042	Line Guide Pawl	BNT1965	Idle Gear A	BNT2648	Idle Gear A Bush
BNT0133	E Lock	BNT1969	Idle Gear B	BNT2649	Screw
BNT0188	O Ring	BNT1973	Click Plate	BNT2650	Clutch Button Support Bar
BNT0425	E Lock	BNT1975	Click Switch Spring	BNT2652	Screw
BNT0664	Spacer B	BNT1976	Click Shaft	BNT2653	Idle Gear B Shaft
BNT0686	E Lock	BNT1978	Click Pawl	BNT2654	Worm Shaft
BNT0799	Friction Washer	BNT2050	Clutch Cam Retainer	BNT2655	Click Spring
BNT0816	Washer	BNT2224	Spool Tension Spacer A	BNT2797	Yoke
BNT0830	Spacer	BNT2238	Screw	BNT2927	Ball Bearing
BNT1133	Yoke Spring	BNT2267	Worm Bushing B	BNT2929	Ball Bearing
BNT1201	Retractor Spring Collar	BNT2296	Return Pin Guide	BNT3095	Handle Assembly
BNT1227	Push Nut (SPN-2)	BNT2301	Clutch Cam	BNT3096	Star Drag
BNT1245	Spacer	BNT2302	Clutch Pawl	BNT3097	Roller Clutch Inner Tube
BNT1354	Screw	BNT2417	Handle Nut	BNT3098	Side Plate Nut
BNT1455	Drag Spring Washer H	BNT2470	Handle Nut Plate	BNT3099	Right Side Plate
BNT1472	Anti-Reverse Pawl	BNT2476	Cast Control Cap	BNT3100	Roller Clutch Assembly
BNT1560	Pawl Cap	BNT2511	Washer	BNT3101	Set Plate
BNT1613	Drag Spring Washer L	BNT2512	Screw	BNT3102	Spool Assembly
BNT1616	Screw	BNT2514	O Ring	BNT3103	Clutch Button Guide A
BNT1618	Key Washer C	BNT2516	Drag Washer AG	BNT3104	Clutch Button Guide B
BNT1620	Eared Washer	BNT2517	Drag Washer CG	BNT3105	Quick-Fire II Clutch Bar
BNT1672	E Lock	BNT2518	Drag Washer BG	BNT3106	One-Piece Frame
BNT1696	Cast Control Spacer B	BNT2519	Drive Gear	BNT3107	Line Guide
BNT1853	Key Washer A	BNT2520	Drive Shaft Washer B	BNT3108	Click Switch
BNT1927	Anti-Reverse Ratchet	BNT2521	Drive Shaft	BNT3109	Left Side Plate
BNT1930	Screw	BNT2522	Pinion Gear	BNT3110	Side I.D. Plate
BNT1931	Retractor Spring	BNT2575	Brake Collar	BNT3130	Washer

(160818)