SHIMANO

CHRONARCH CI4+ S A-RB

CH-CI4+150

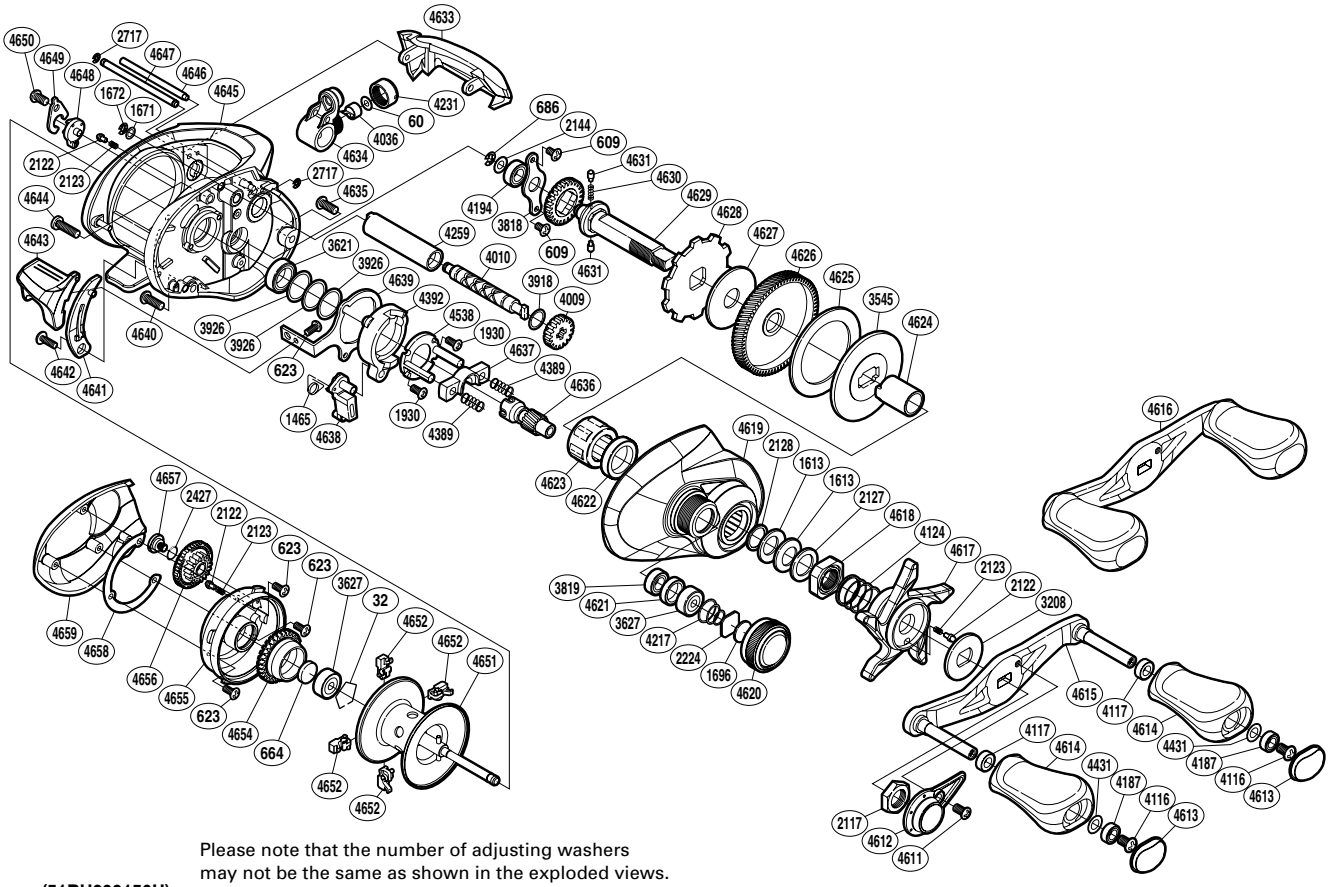

Please note that the number of adjusting washers may not be the same as shown in the exploded views. (Adjustment will vary with each individual product.)

(51RH299150U)

Part No.	Description	Part No.	Description	Part No.	Description
BNT0032	Bearing Retainer	BNT4116	Screw	BNT4631	Idle Gear Pin
BNT0060	Spacer	BNT4117	Handle Knob Bushing	BNT4632	Idle Gear
BNT0609	Screw	BNT4124	Star Drag Spring	BNT4633	Level Wind Protector
BNT0623	Screw	BNT4187	Ball Bearing	BNT4634	Line Guide
BNT0664	Spacer B	BNT4194	Ball Bearing	BNT4635	Screw
BNT0686	E Lock	BNT4217	Spool Tension Spring	BNT4636	Pinion Gear
BNT1465	Clutch Pawl Spring	BNT4231	Pawl Cap	BNT4637	Yoke
BNT1613	Drag Spring Washer	BNT4259	Level Wind Guard	BNT4638	Clutch Pawl
BNT1671	Washer	BNT4389	Yoke Spring	BNT4639	Clutch Plate
BNT1672	E Lock	BNT4392	Clutch Cam	BNT4640	Screw
BNT1696	Cast Control Spacer	BNT4431	Washer	BNT4641	Clutch Bar Guide
BNT1930	Screw	BNT4538	Clutch Cam Retainer	BNT4642	Screw
BNT2117	Handle Nut	BNT4611	Screw	BNT4643	Quick-Fire II Clutch Bar
BNT2122	Click Pin	BNT4612	Handle Retainer	BNT4644	Screw
BNT2123	Click Spring	BNT4613	Handle Knob Seal	BNT4645	One-Piece Frame
BNT2127	Star Drag Spacer	BNT4614	Handle Knob	BNT4646	Stabilizer Bar
BNT2128	Bearing Washer	BNT4615	Handle Shank Assembly	BNT4647	Line Guard
BNT2144	Washer	BNT4616	Handle Assembly	BNT4648	Side Plate Cam Lever
BNT2224	Spool Tension Spacer	BNT4617	Star Drag	BNT4649	Cam Lever Retainer
BNT2427	O Ring	BNT4618	Star Drag Nut	BNT4650	Screw
BNT2717	E Lock	BNT4619	Right Side Plate	BNT4651	Spool Assembly
BNT3208	Star Drag Click Plate	BNT4620	Cast Control Cap	BNT4652	Brake Shoe
BNT3545	Key Washer	BNT4621	Bearing Spacer	BNT4654	Brake Pipe Gear
BNT3621	Ball Bearing	BNT4622	Drive Shaft Holder Bushing	BNT4655	Brake Case
BNT3627	Ball Bearing	BNT4623	Roller Clutch Bearing	BNT4656	BR Dial
BNT3818	Drive Shaft Retainer	BNT4624	Roller Clutch Inner Tube	BNT4657	Screw
BNT3819	Ball Bearing	BNT4625	Drag Washer	BNT4658	Brake Case Adjusting Washer
BNT3918	Washer	BNT4626	Drive Gear	BNT4659	Left Side Plate
BNT3926	Washer	BNT4627	Drag Washer		
BNT4009	Idle Gear	BNT4628	Anti-Reverse Ratchet		
BNT4010	Worm Shaft	BNT4629	Drive Shaft		
BNT4036	Line Guide Pawl	BNT4630	Idle Gear Spring	BNT4692	B-100 Oil (accessory)