# SHIMANO

## CHRONARCH SA-RB

## CH-200E7

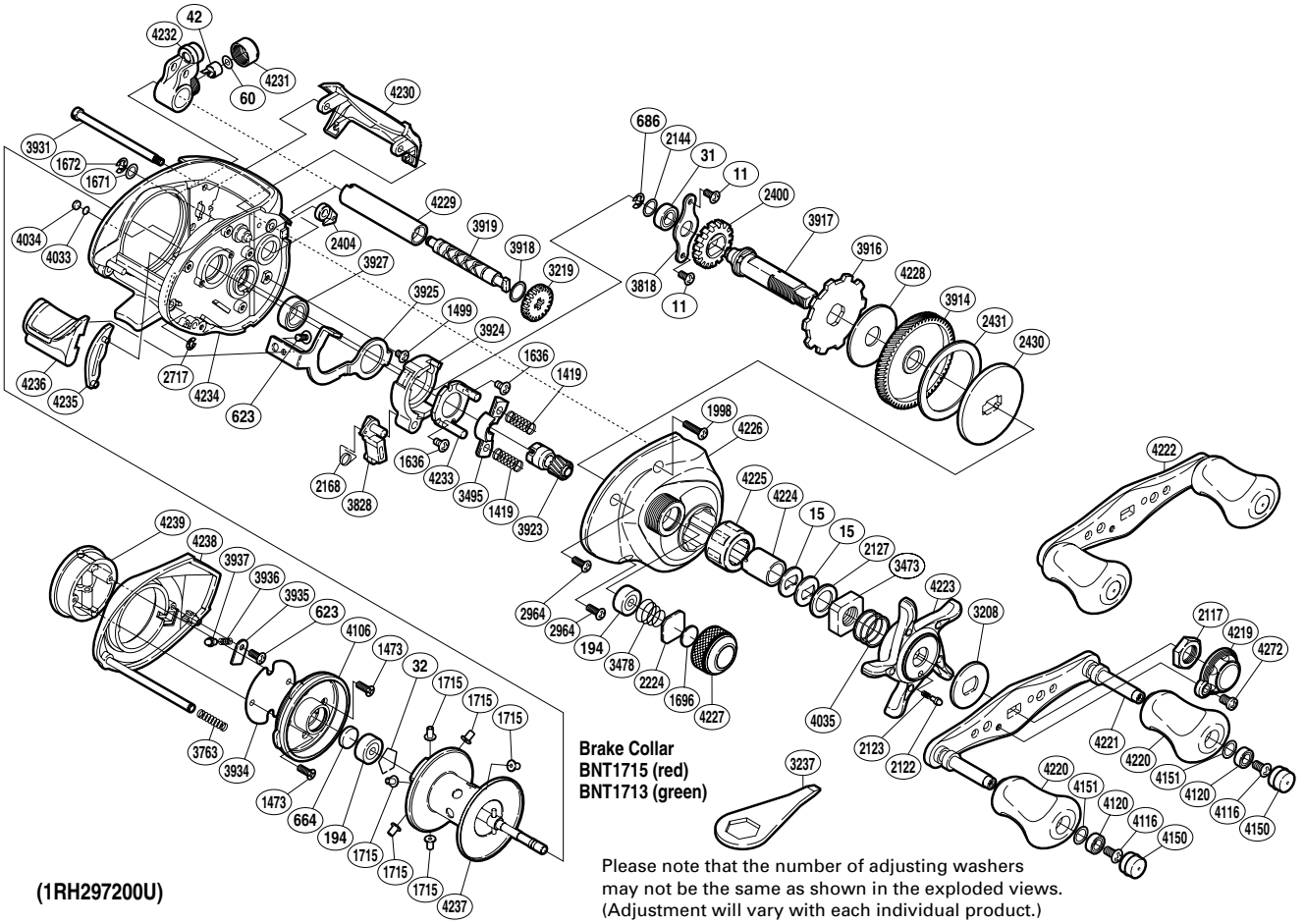


(1RH297200U)

Please note that the number of adjusting washers may not be the same as shown in the exploded views. (Adjustment will vary with each individual product.)

| Part No. | Description | Part No. | Description | Part No. | Description |
|---|---|---|---|---|---|
| BNT0011 | Screw | BNT2431 | Drag Washer | BNT4116 | Screw |
| BNT0015 | Drag Spring Washer | BNT2717 | E Lock | BNT4120 | Ball Bearing |
| BNT0031 | Ball Bearing | BNT2964 | Screw | BNT4150 | Handle Knob Seal |
| BNT0032 | Bearing Retainer | BNT3208 | Star Drag Click Plate | BNT4151 | Washer |
| BNT0042 | Line Guide Pawl | BNT3219 | Idle Gear | BNT4219 | Handle Retainer |
| BNT0060 | Spacer | BNT3473 | Star Drag Nut | BNT4220 | Handle Knob |
| BNT0194 | Ball Bearing | BNT3478 | Spool Tension Spring | BNT4221 | Handle Shank Assembly |
| BNT0623 | Screw | BNT3495 | Yoke | BNT4222 | Handle Assembly |
| BNT0664 | Spacer B | BNT3763 | Side Plate Spring | BNT4223 | Star Drag |
| BNT0686 | E Lock | BNT3818 | Drive Shaft Retainer | BNT4224 | Roller Clutch Inner Tube |
| BNT1419 | Yoke Spring | BNT3828 | Clutch Pawl | BNT4225 | Roller Clutch Bearing |
| BNT1473 | Screw | BNT3914 | Drive Gear | BNT4226 | Right Side Plate |
| BNT1499 | Screw | BNT3916 | Anti-Reverse Ratchet | BNT4227 | Cast Control Cap |
| BNT1636 | Screw | BNT3917 | Drive Shaft | BNT4228 | Drag Washer |
| BNT1671 | Washer | BNT3918 | Washer | BNT4229 | Level Wind Guard |
| BNT1672 | E Lock | BNT3919 | Worm Shaft | BNT4230 | Level Wind Protector |
| BNT1696 | Cast Control Spacer | BNT3923 | Pinion Gear | BNT4231 | Pawl Cap |
| BNT1715 | Brake Collar (red) | BNT3924 | Clutch Cam | BNT4232 | Line Guide |
| BNT1998 | Screw | BNT3925 | Clutch Plate | BNT4233 | Clutch Cam Retainer |
| BNT2117 | Handle Nut | BNT3927 | Ball Bearing | BNT4234 | One-Piece Frame |
| BNT2122 | Click Pin | BNT3931 | Level Wind Guide | BNT4235 | Clutch Bar Guide |
| BNT2123 | Click Spring | BNT3934 | Brake Case Spacer | BNT4236 | Quick-Fire II Clutch Bar |
| BNT2127 | Star Drag Spacer | BNT3935 | Brake Spring Retainer | BNT4237 | Spool Assembly |
| BNT2144 | Washer | BNT3936 | Click Spring | BNT4238 | Left Side Plate |
| BNT2168 | Clutch Pawl Spring | BNT3937 | Click Pin | BNT4239 | Turnkey Dial |
| BNT2224 | Spool Tension Spacer | BNT4033 | Washer | BNT4272 | Screw |
| BNT2400 | Idle Gear | BNT4034 | Anti-Thrust Washer | | |
| BNT2404 | Anti-Reverse Pawl | BNT4035 | Star Drag Spring | BNT1713 | Brake Collar (green) (accessory) |
| BNT2430 | Key Washer | BNT4106 | Brake Case | BNT3237 | Wrench (accessory) |