SHIMANO

CITICA

CI-200G7

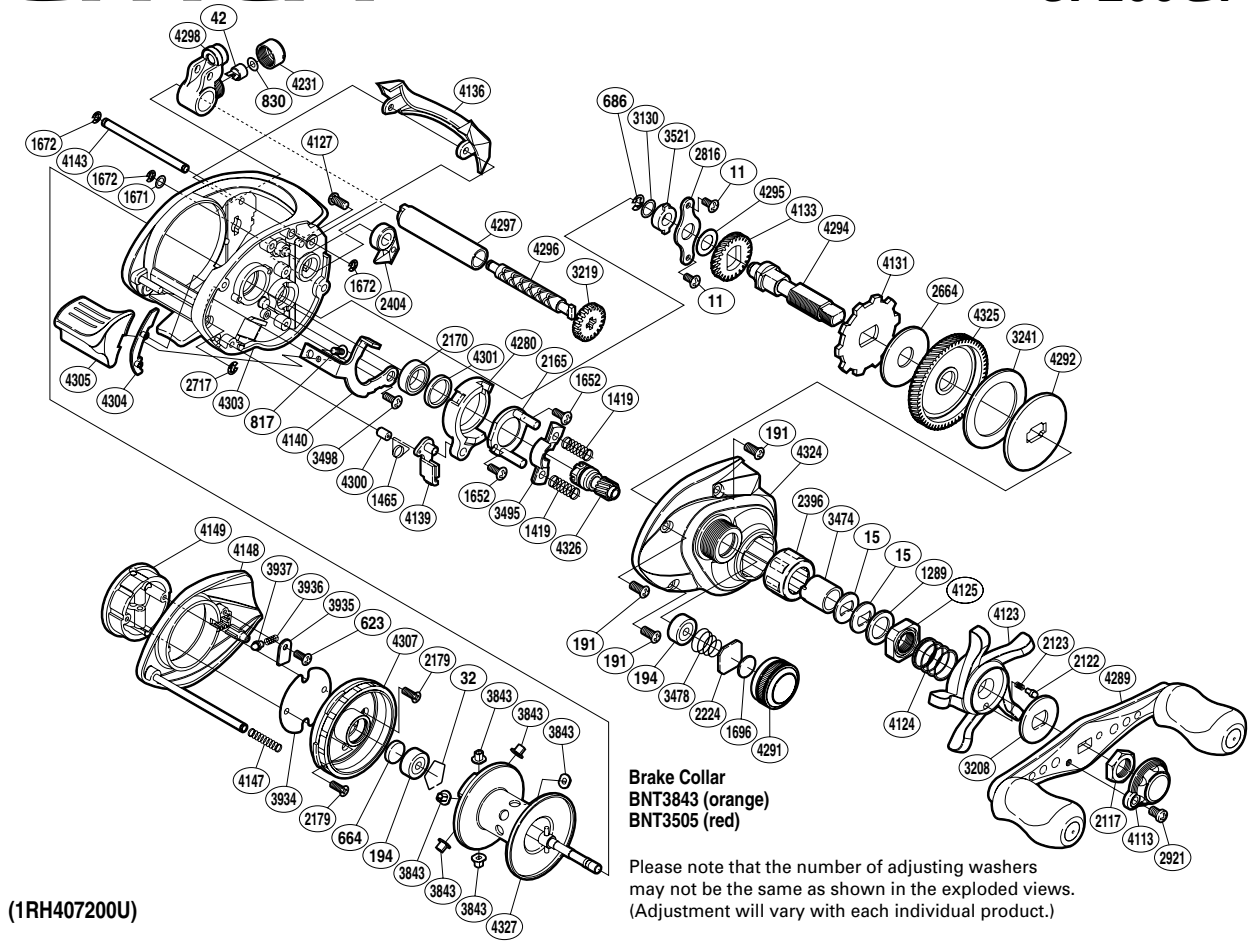

Brake Collar
BNT3843 (orange)
BNT3505 (red)

Please note that the number of adjusting washers may not be the same as shown in the exploded views. (Adjustment will vary with each individual product.)

(1RH407200U)

Part No.	Description	Part No.	Description	Part No.	Description
BNT0011	Screw	BNT2664	Drag Washer	BNT4140	Clutch Plate
BNT0015	Drag Spring Washer	BNT2717	E Lock	BNT4143	Stabilizer Bar
BNT0032	Bearing Retainer	BNT2816	Drive Shaft Retainer	BNT4147	Damper Spring
BNT0042	Line Guide Pawl	BNT2921	Screw	BNT4148	Left Side Plate
BNT0191	Screw	BNT3130	Washer	BNT4149	Turnkey Dial
BNT0194	Ball Bearing	BNT3208	Star Drag Click Plate	BNT4231	Pawl Cap
BNT0623	Screw	BNT3219	Idle Gear	BNT4280	Clutch Cam
BNT0664	Spacer B	BNT3241	Drag Washer	BNT4289	Handle Assembly
BNT0686	E Lock	BNT3474	Roller Clutch Inner Tube	BNT4291	Cast Control Cap
BNT0817	Screw	BNT3478	Spool Tension Spring	BNT4292	Key Washer
BNT0830	Spacer	BNT3495	Yoke	BNT4294	Drive Shaft
BNT1289	Star Drag Spacer	BNT3498	Screw	BNT4295	Washer
BNT1419	Yoke Spring	BNT3521	Drive Shaft Bushing	BNT4296	Worm Shaft
BNT1465	Clutch Pawl Spring	BNT3843	Brake Collar (orange)	BNT4297	Level Wind Guard
BNT1652	Screw	BNT3934	Brake Case Spacer	BNT4298	Line Guide
BNT1671	Washer	BNT3935	Brake Spring Retainer	BNT4300	Retractor Spring Collar
BNT1672	E Lock	BNT3936	Click Spring	BNT4301	Bearing Bushing
BNT1696	Cast Control Spacer	BNT3937	Click Pin	BNT4303	One-Piece Frame
BNT2117	Handle Nut	BNT4113	Handle Retainer	BNT4304	Clutch Bar Guide
BNT2122	Click Pin	BNT4123	Star Drag	BNT4305	Quick-Fire II Clutch Bar
BNT2123	Click Spring	BNT4124	Star Drag Spring	BNT4307	Brake Case
BNT2165	Clutch Cam Retainer	BNT4125	Star Drag Nut	BNT4324	Right Side Plate
BNT2170	Ball Bearing	BNT4127	Screw	BNT4325	Drive Gear
BNT2179	Screw	BNT4131	Anti-Reverse Ratchet	BNT4326	Pinion Gear
BNT2224	Spool Tension Spacer	BNT4133	Idle Gear	BNT4327	Spool Assembly
BNT2396	Roller Clutch Bearing	BNT4136	Level Wind Protector		
BNT2404	Anti-Reverse Pawl	BNT4139	Clutch Pawl	BNT3505	Brake Collar (red) (accessory)