SHIMANO

CURADO

CU-100DSV

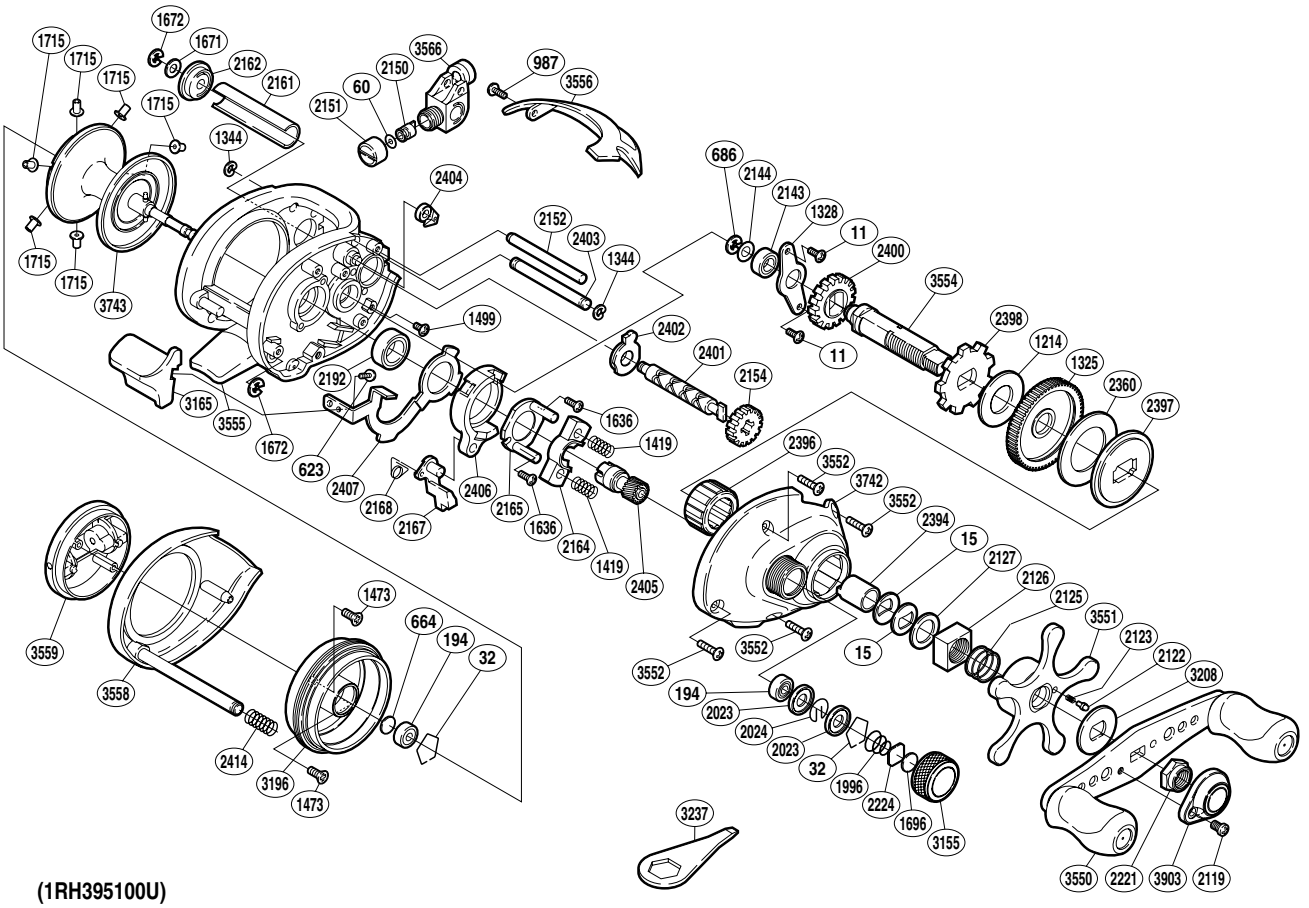

(1RH395100U)

Part No.	Description	Part No.	Description	Part No.	Description
BNT0011	Screw	BNT2123	Click Spring	BNT2402	Worm Bushing A
BNT0015	Drag Spring Washer	BNT2125	Star Drag Spring	BNT2403	Line Guard
BNT0032	Bearing Retainer	BNT2126	Star Drag Nut	BNT2404	Anti-Reverse Pawl
BNT0060	Spacer	BNT2127	Star Drag Spacer	BNT2405	Pinion Gear
BNT0194	Ball Bearing	BNT2143	Ball Bearing	BNT2406	Clutch Cam
BNT0623	Screw	BNT2144	Washer	BNT2407	Clutch Plate
BNT0664	Spacer B	BNT2150	Line Guide Pawl	BNT2414	Side Plate Spring
BNT0686	E Lock	BNT2151	Pawl Cap	BNT3155	Cast Control Cap
BNT0987	Screw	BNT2152	Level Wind Guide	BNT3165	Quick-Fire II Clutch Bar
BNT1214	Drag Washer	BNT2154	Idle Gear	BNT3196	Brake Case
BNT1325	Drive Gear	BNT2161	Level Wind Guard	BNT3208	Star Drag Click Plate
BNT1328	Drive Shaft Retainer	BNT2162	Worm Bushing B	BNT3550	Handle Assembly
BNT1344	C Lock	BNT2164	Yoke	BNT3551	Star Drag
BNT1419	Yoke Spring	BNT2165	Clutch Cam Retainer	BNT3552	Screw
BNT1473	Screw	BNT2167	Clutch Pawl	BNT3554	Drive Shaft
BNT1499	Screw	BNT2168	Clutch Pawl Spring	BNT3555	One-Piece Frame
BNT1636	Screw	BNT2192	Ball Bearing	BNT3556	Thumb Rest
BNT1671	Washer	BNT2221	Handle Nut	BNT3558	Left Side Plate
BNT1672	E Lock	BNT2224	Spool Tension Spacer	BNT3559	Turnkey Dial
BNT1696	Cast Control Spacer	BNT2360	Drag Washer	BNT3566	Line Guide
BNT1715	Brake Collar (red)	BNT2394	Roller Clutch Inner Tube	BNT3742	Right Side Plate
BNT1996	Spool Tension Spring	BNT2396	Roller Clutch Bearing	BNT3743	Spool Assembly
BNT2023	Spool Shaft Clip Holder	BNT2397	Key Washer	BNT3903	Handle Retainer
BNT2024	Spool Shaft Clip	BNT2398	Anti-Reverse Ratchet		
BNT2119	Screw	BNT2400	Idle Gear A		
BNT2122	Click Pin	BNT2401	Worm Shaft	BNT3237	Wrench (accessory)