SHIMANO®

CURADO

CU-200

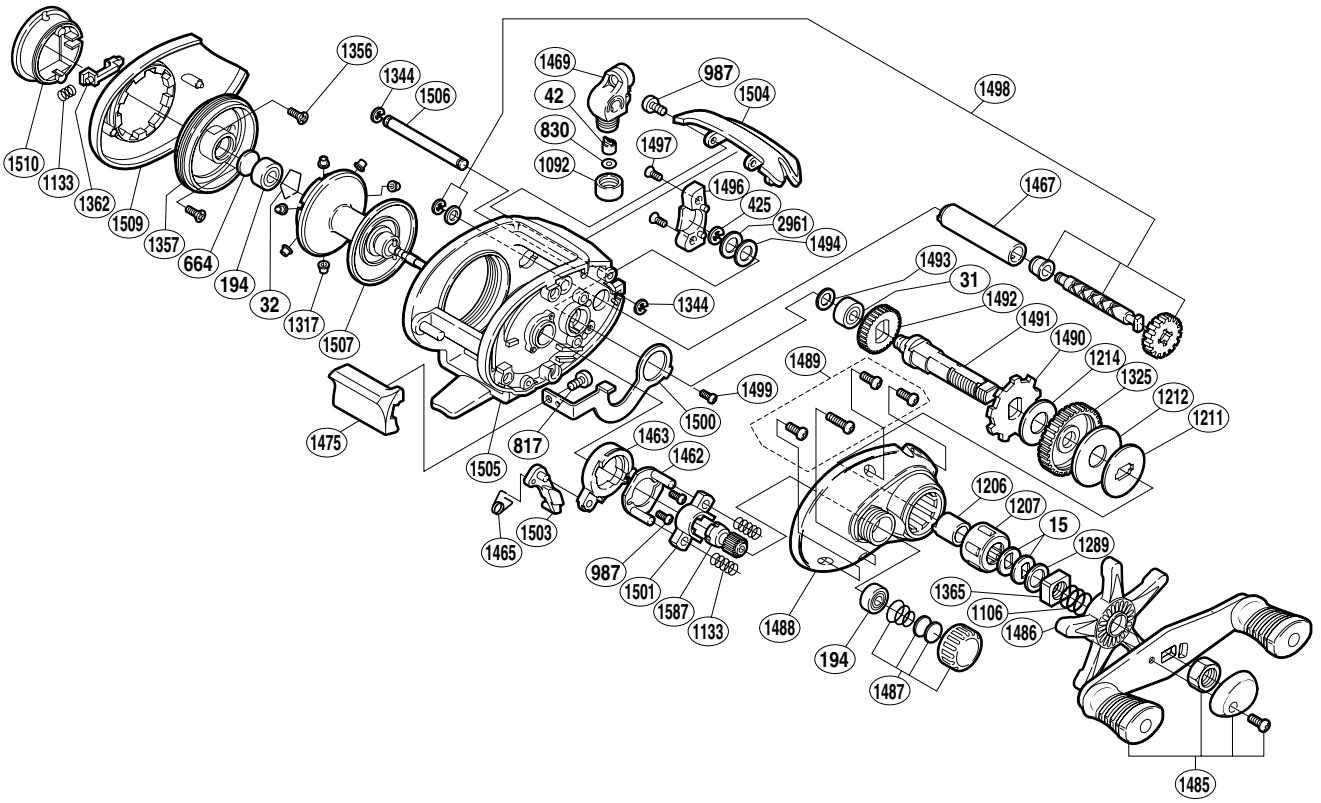

Part No.	Description	Part No.	Description	Part No.	Description
BNT0015	Drag Spring Washer	BNT1317	Brake Collars (red-6 pieces)	BNT1491	Drive Shaft
BNT0031	Ball Bearing	BNT1325	Drive Gear	BNT1492	Idle Gear
BNT0032	Bearing Retainer	BNT1344	"C"Lock	BNT1493	Drive Gear Washer
BNT0042	Line Guide Pawl	BNT1356	Brake Case Retainer Screw	BNT1494	Drive Shaft Washer (B)
BNT0194	Ball Bearing	BNT1357	Brake Case	BNT1496	Drive Shaft Cover
BNT0425	"E"Lock	BNT1362	Turnkey Pawl	BNT1497	Drive Shaft Cover Screw
BNT0664	Spacer (B)	BNT1365	Star Drag Nut	BNT1498	Worm Shaft Assembly
BNT0817	Clutch Bar Screw	BNT1462	Clutch Cam Retainer	BNT1499	Clutch Plate Screw
BNT0830	Spacer (optional)	BNT1463	Clutch Cam	BNT1500	Clutch Plate
BNT0987	Multi Purpose Screw	BNT1465	Clutch Pawl Spring	BNT1501	Yoke
BNT1092	Pawl Cap	BNT1467	Level Wind Guard	BNT1503	Clutch Pawl
BNT1106	Star Drag Spring	BNT1469	Line Guide	BNT1504	Thumb Rest
BNT1133	Yoke / Turnkey Pawl Spring	BNT1475	Quick-Fire II Clutch Bar	BNT1505	One-Piece Frame
BNT1206	Roller Clutch Inner Tube	BNT1485	Handle Assembly	BNT1506	Line Guard
BNT1207	Roller Clutch Bearing	BNT1486	Star Drag	BNT1507	Spool Assembly
BNT1211	Key Washer	BNT1487	Cast Control Cap Assembly	BNT1509	Left Side Plate
BNT1212	Drag Washer (C)	BNT1488	Right Side Plate	BNT1510	Turnkey Dial
BNT1214	Drag Washer (A)	BNT1489	Side Plate Screws	BNT1587	Pinion Gear
BNT1289	Star Drag Spacer	BNT1490	Anti-Reverse Ratchet	BNT2961	Drive Shaft Washer

(141030)