SHIMANO®

CURADO

CU-201

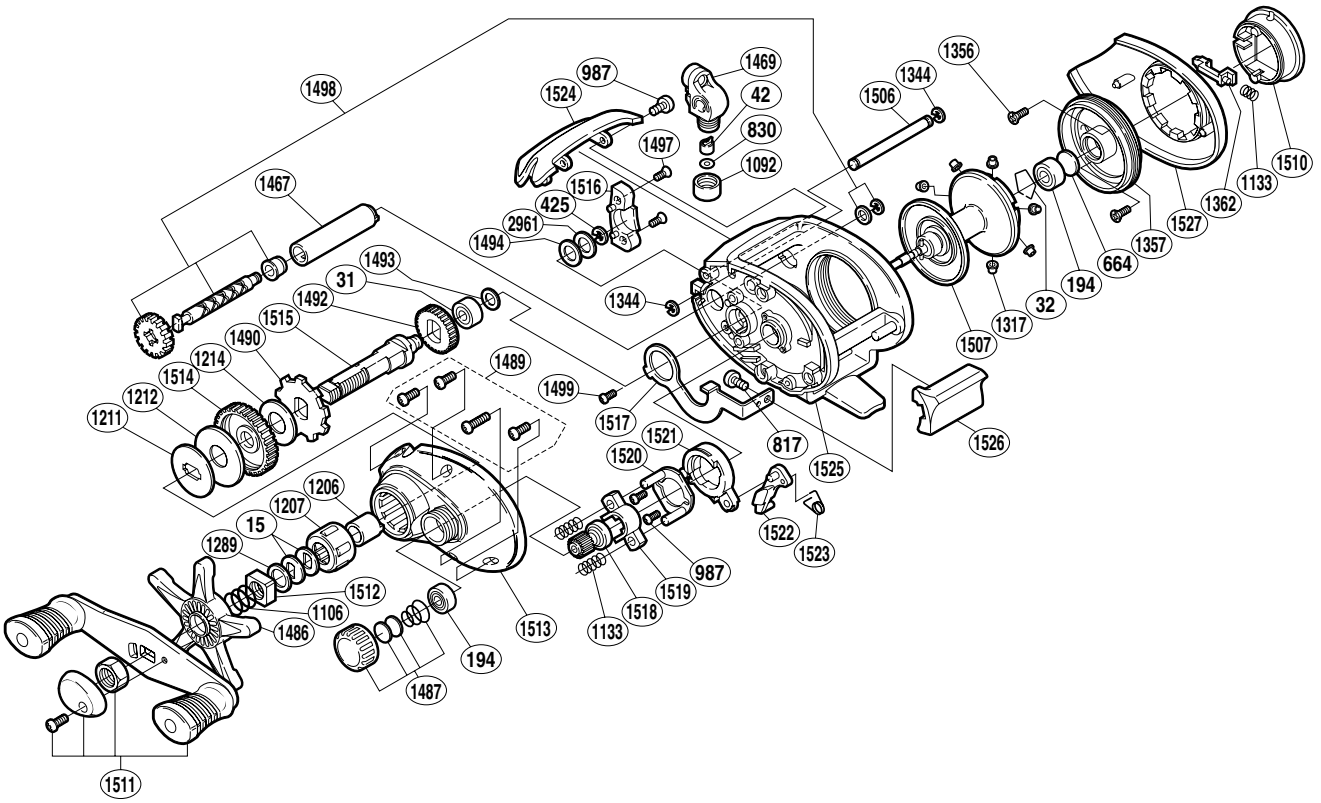

Part No.	Description	Part No.	Description	Part No.	Description
BNT0015	Drag Spring Washer	BNT1317	Brake Collars (red-6 pieces)	BNT1510	Turnkey Dial
BNT0031	Ball Bearing	BNT1344	“C”Lock	BNT1511	Handle Assembly
BNT0032	Bearing Retainer	BNT1356	Brake Case Retainer Screw	BNT1512	Star Drag Nut
BNT0042	Line Guide Pawl	BNT1357	Brake Case	BNT1513	Left Side Plate
BNT0194	Ball Bearing	BNT1362	Turnkey Pawl	BNT1514	Drive Gear
BNT0425	“E”Lock	BNT1467	Level Wind Guard	BNT1515	Drive Shaft
BNT0664	Spacer (B)	BNT1469	Line Guide	BNT1516	Drive Shaft Cover
BNT0817	Clutch Bar Screw	BNT1486	Star Drag	BNT1517	Clutch Plate
BNT0830	Spacer (optional)	BNT1487	Cast Control Cap Assembly	BNT1518	Pinion Gear
BNT0987	Multi Purpose Screw	BNT1489	Side Plate Screws	BNT1519	Yoke
BNT1092	Pawl Cap	BNT1490	Anti-Reverse Ratchet	BNT1520	Clutch Cam Retainer
BNT1106	Star Drag Spring	BNT1492	Idle Gear	BNT1521	Clutch Cam
BNT1133	Yoke / Turnkey Pawl Spring	BNT1493	Drive Gear Washer	BNT1522	Clutch Pawl
BNT1206	Roller Clutch Inner Tube	BNT1494	Drive Shaft Washer (B)	BNT1523	Clutch Pawl Spring
BNT1207	Roller Clutch Bearing	BNT1497	Drive Shaft Cover Screw	BNT1524	Thumb Rest
BNT1211	Key Washer	BNT1498	Worm Shaft Assembly	BNT1525	One-Piece Frame
BNT1212	Drag Washer (C)	BNT1499	Clutch Plate Screw	BNT1526	Quick-Fire II Clutch Bar
BNT1214	Drag Washer (A)	BNT1506	Line Guard	BNT1527	Right Side Plate
BNT1289	Star Drag Spacer	BNT1507	Spool Assembly	BNT2961	Drive Shaft Washer

(141030)