SHIMANO

CURADO A-RB

CU-51E

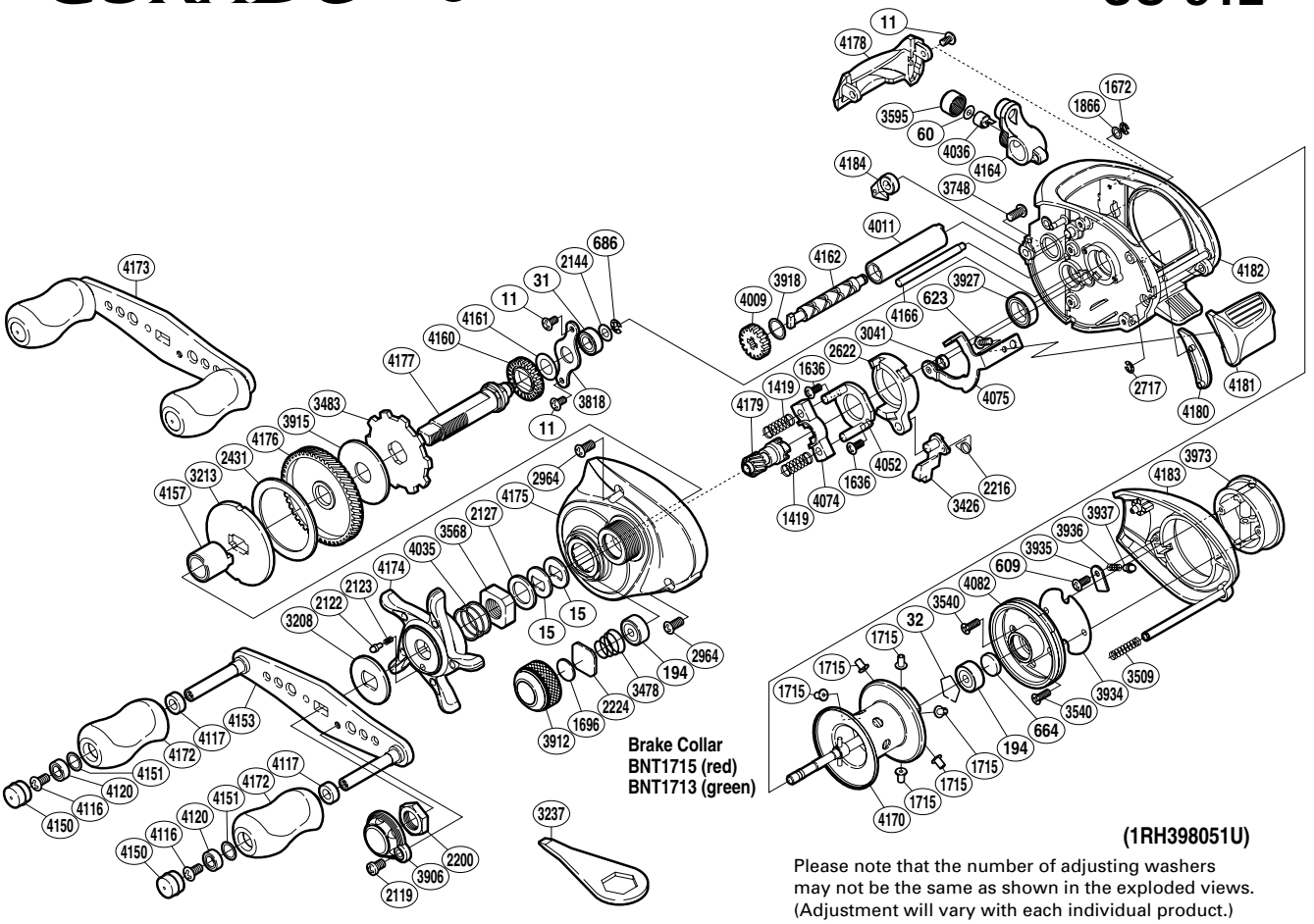

(1RH398051U)

Please note that the number of adjusting washers may not be the same as shown in the exploded views. (Adjustment will vary with each individual product.)

Part No.	Description	Part No.	Description	Part No.	Description
BNT0011	Screw	BNT3208	Star Drag Click Plate	BNT4116	Screw
BNT0015	Drag Spring Washer	BNT3213	Key Washer	BNT4117	Handle Knob Bushing
BNT0031	Ball Bearing	BNT3426	Clutch Pawl	BNT4120	Ball Bearing
BNT0032	Bearing Retainer	BNT3478	Spool Tension Spring	BNT4150	Handle Knob Seal
BNT0060	Spacer	BNT3483	Anti-Reverse Ratchet	BNT4151	Washer
BNT0194	Ball Bearing	BNT3509	Side Plate Spring	BNT4153	Handle Shank Assembly
BNT0609	Screw	BNT3540	Screw	BNT4157	Roller Clutch Inner Tube
BNT0623	Screw	BNT3568	Star Drag Nut	BNT4160	Idle Gear
BNT0664	Spacer B	BNT3595	Pawl Cap	BNT4161	Washer
BNT0686	E Lock	BNT3748	Screw	BNT4162	Worm Shaft
BNT1419	Yoke Spring	BNT3818	Drive Shaft Retainer	BNT4164	Line Guide
BNT1636	Screw	BNT3906	Handle Retainer	BNT4166	Level Wind Guide
BNT1672	E Lock	BNT3912	Cast Control Cap	BNT4170	Spool Assembly
BNT1696	Cast Control Spacer	BNT3915	Drag Washer	BNT4172	Handle Knob
BNT1715	Brake Collar (red)	BNT3918	Washer	BNT4173	Handle Assembly
BNT1866	Washer	BNT3927	Ball Bearing	BNT4174	Star Drag
BNT2119	Screw	BNT3934	Brake Case Spacer	BNT4175	Left Side Plate
BNT2122	Click Pin	BNT3935	Brake Spring Retainer	BNT4176	Drive Gear
BNT2123	Click Spring	BNT3936	Click Spring	BNT4177	Drive Shaft
BNT2127	Star Drag Spacer	BNT3937	Click Pin	BNT4178	Level Wind Protector
BNT2144	Washer	BNT3973	Turnkey Dial	BNT4179	Pinion Gear
BNT2200	Handle Nut	BNT4009	Idle Gear	BNT4180	Clutch Bar Guide
BNT2216	Clutch Pawl Spring	BNT4011	Level Wind Guard	BNT4181	Quick-Fire II Clutch Bar
BNT2224	Spool Tension Spacer	BNT4035	Star Drag Spring	BNT4182	One-Piece Frame
BNT2431	Drag Washer	BNT4036	Line Guide Pawl	BNT4183	Right Side Plate
BNT2622	Clutch Cam	BNT4052	Clutch Cam Retainer	BNT4184	Anti-Reverse Pawl
BNT2717	E Lock	BNT4074	Yoke		
BNT2964	Screw	BNT4075	Clutch Plate	BNT1713	Brake Collar (green) (accessory)
BNT3041	Clutch Plate Shaft Support	BNT4082	Brake Case	BNT3237	Wrench (accessory)

(220413)