# SHIMANO

## SAHARA S A-RB

## SH-1000FD

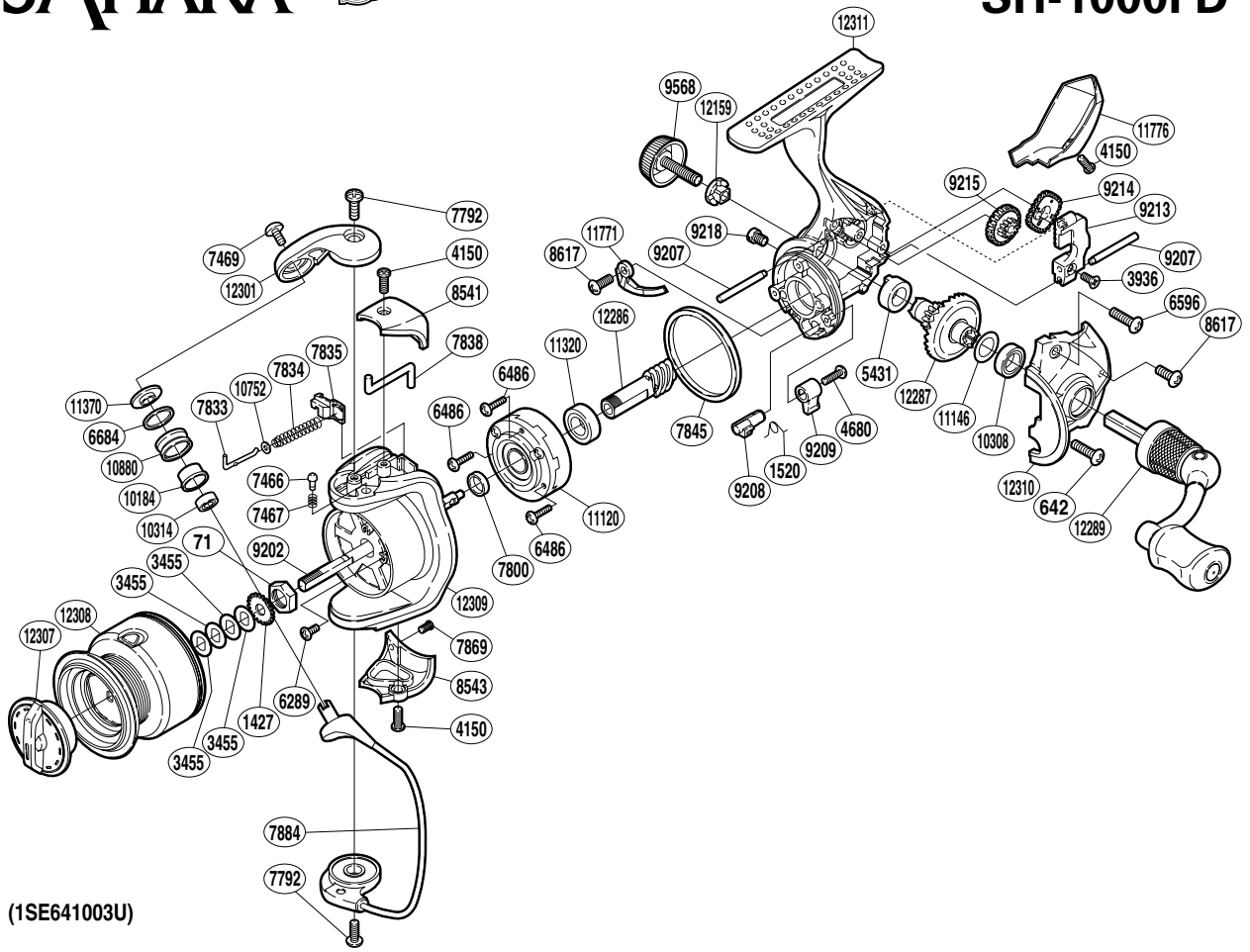


(1SE641003U)

| Part No. | Description | Part No. | Description | Part No. | Description |
|---|---|---|---|---|---|
| RD 0071 | Rotor Nut | RD 7835 | Bail Spring Seat | RD10320 | Ball Bearing |
| RD 0642 | Screw | RD 7838 | Bail Trip Lever | RD10752 | Spring Guide A Support |
| RD 1427 | Spool Support | RD 7845 | Friction Ring | RD10880 | Line Roller |
| RD 1520 | Anti-Reverse Cam Spring | RD 7869 | Screw | RD11120 | Roller Clutch Assembly |
| RD 3455 | Spool Washer | RD 7884 | Bail Assembly | RD11146 | Washer |
| RD 3936 | Screw | RD 8541 | Bail Spring Cover | RD11370 | Line Roller Washer |
| RD 4150 | Screw | RD 8543 | Bail Hold Support Guard | RD11771 | Bail Trip Strike |
| RD 4680 | Screw | RD 8617 | Screw | RD11776 | Rear Protector |
| RD 5431 | Drive Gear Bushing | RD 9202 | Main Shaft | RD12159 | Handle Screw Lock Washer |
| RD 6289 | Screw | RD 9207 | Oscillating Guide | RD12286 | Pinion Gear |
| RD 6486 | Screw | RD 9208 | Anti-Reverse Cam | RD12287 | Drive Gear |
| RD 6596 | Screw | RD 9209 | Anti-Reverse Lever | RD12289 | Handle Assembly |
| RD 6684 | Line Roller Spacer | RD 9213 | Oscillating Slider | RD12301 | Bail Arm |
| RD 7466 | Click Pin | RD 9214 | Oscillating Gear | RD12307 | Drag Knob |
| RD 7467 | Click Spring | RD 9215 | Idle Gear | RD12308 | Spool Assembly |
| RD 7469 | Screw | RD 9218 | Oil Cap | RD12309 | Rotor |
| RD 7792 | Screw | RD 9568 | Handle Screw Cap | RD12310 | Side Cover |
| RD 7800 | Rotor Ring | RD10184 | Line Roller Bushing | RD12311 | Body |
| RD 7833 | Bail Spring Guide A | RD10308 | Ball Bearing | | |
| RD 7834 | Bail Spring | RD10314 | Ball Bearing | | |