SHIMANO

SAROS SA-RB

SAR-2500F

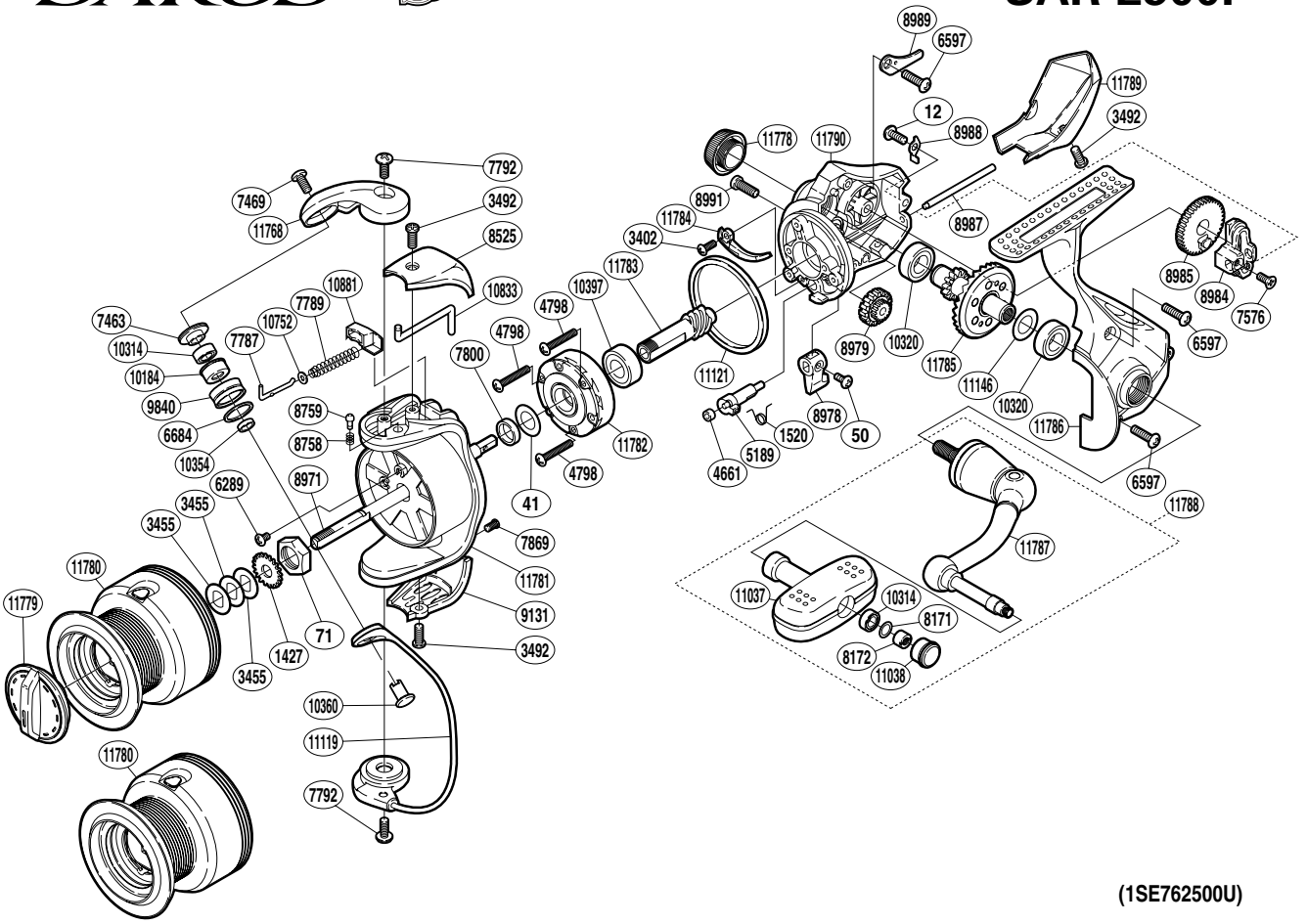

(1SE762500U)

Part No.	Description	Part No.	Description	Part No.	Description
RD 0012	Screw	RD 8171	Washer	RD10833	Bail Trip Lever
RD 0041	Washer	RD 8172	Handle Knob Nut	RD10881	Bail Spring Seat
RD 0050	Screw	RD 8525	Bail Spring Cover	RD11037	Handle Knob
RD 0071	Rotor Nut	RD 8758	Click Spring	RD11038	Handle Knob Seal
RD 1427	Spool Support	RD 8759	Click Pin	RD11119	Bail Assembly
RD 1520	Anti-Reverse Cam Spring	RD 8971	Main Shaft	RD11121	Friction Ring
RD 3402	Screw	RD 8978	Anti-Reverse Lever	RD11146	Washer
RD 3455	Spool Washer	RD 8979	Idle Gear	RD11768	Bail Arm
RD 3492	Screw	RD 8984	Oscillating Slider	RD11778	Handle Screw Cap
RD 4661	Anti-Reverse Cam Ring	RD 8985	Oscillating Gear	RD11779	Drag Knob
RD 4798	Screw	RD 8987	Oscillating Guide	RD11780	Spool Assembly
RD 5189	Anti-Reverse Cam	RD 8988	Oscillating Guide Retainer	RD11781	Rotor
RD 6289	Screw	RD 8989	Oscillating Guide Plate	RD11782	Roller Clutch Assembly
RD 6597	Screw	RD 8991	Oil Cap	RD11783	Pinion Gear
RD 6684	Line Roller Spacer	RD 9131	Bail Hold Support Guard	RD11784	Bail Trip Strike
RD 7463	Line Roller Washer	RD 9840	Line Roller	RD11785	Drive Gear
RD 7469	Screw	RD10184	Line Roller Bushing	RD11786	Side Cover
RD 7576	Screw	RD10314	Ball Bearing	RD11787	Handle Shank Assembly
RD 7787	Bail Spring Guide A	RD10320	Ball Bearing	RD11788	Handle Assembly
RD 7789	Bail Spring	RD10354	Bearing Spacer	RD11789	Rear Protector
RD 7792	Screw	RD10360	Line Roller Support	RD11790	Body
RD 7800	Rotor Ring	RD10397	Ball Bearing		
RD 7869	Screw	RD10752	Spring Guide A Support		