SHIMANO

SAROS SA-RB

SAR-2500FA

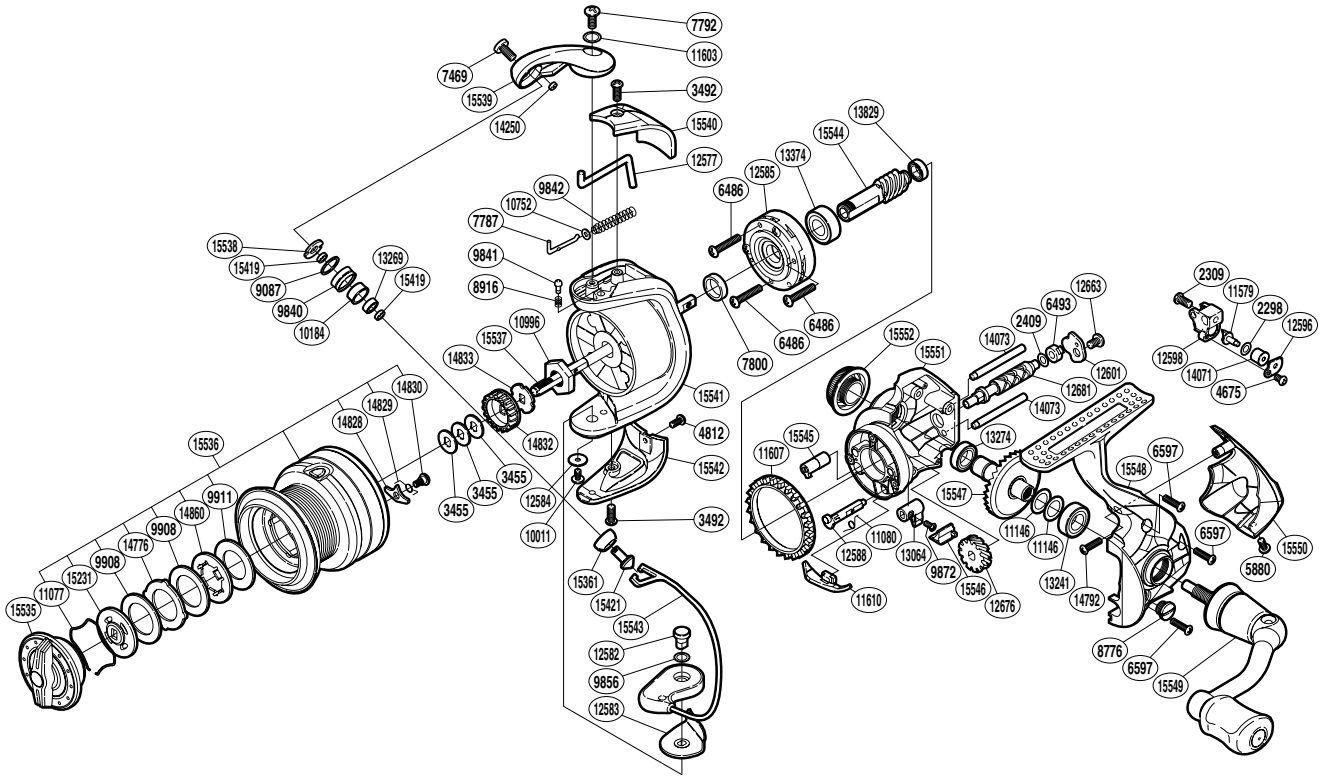

(1SE762501U)

Please note that the number of adjusting washers may not be the same as shown in the exploded views. (Adjustment will vary with each individual product.)

Part No.	Description	Part No.	Description	Part No.	Description
RD 2298	Spacer	RD11077	Drag Washers Retainer	RD14792	Screw
RD 2309	Screw	RD11080	Anti-Reverse Cam Spring	RD14828	Drag Click
RD 2409	Spacer	RD11146	Washer	RD14829	Drag Click Spring
RD 3455	Spool Washer	RD11579	Oscillating Pawl	RD14830	Screw
RD 3492	Screw	RD11603	Washer	RD14832	Spool Support A
RD 4675	Screw	RD11607	Friction Ring	RD14833	Spool Support B
RD 4812	Screw	RD11610	Bail Trip Strike	RD14860	Key Washer
RD 5880	Screw	RD12577	Bail Trip Lever	RD15231	Key Washer
RD 6486	Screw	RD12582	Bail Hold Support Shaft	RD15361	Line Roller Support Cover
RD 6493	Worm Bushing (rear)	RD12583	Bail Hold Support Spacer	RD15419	Bearing Spacer
RD 6597	Screw	RD12584	Washer	RD15421	Line Roller Support
RD 7469	Screw	RD12585	Roller Clutch Assembly	RD15535	Drag Knob
RD 7787	Bail Spring Guide A	RD12588	Anti-Reverse Cam	RD15536	Spool Assembly
RD 7792	Screw	RD12596	Oscillating Pawl Cover	RD15537	Main Shaft
RD 7800	Rotor Ring	RD12598	Oscillating Slider	RD15538	Line Roller Plate
RD 8776	Oil Cap	RD12601	Worm Shaft Retainer	RD15539	Bail Arm
RD 8916	Click Spring	RD12663	Screw	RD15540	Bail Spring Cover
RD 9087	Line Roller Spacer	RD12676	Idle Gear	RD15541	Rotor
RD 9840	Line Roller	RD12681	Worm Shaft	RD15542	Bail Hold Support Guard
RD 9841	Click Pin	RD13064	Anti-Reverse Lever	RD15543	Bail Assembly
RD 9842	Bail Spring	RD13241	Ball Bearing	RD15544	Pinion Gear
RD 9856	Washer	RD13269	Ball Bearing	RD15545	Worm Bushing (front)
RD 9872	Screw	RD13274	Ball Bearing	RD15546	Anti-Reverse Lever Cover
RD 9908	Drag Washer	RD13374	Ball Bearing	RD15547	Drive Gear
RD 9911	Drag Washer	RD13829	Ball Bearing	RD15548	Side Cover
RD10011	Screw	RD14071	Oscillating Slider Bushing	RD15549	Handle Assembly
RD10184	Line Roller Bushing	RD14073	Oscillating Guide	RD15550	Rear Protector
RD10752	Bail Spring Guide A Support	RD14250	Line Roller Oil Cap	RD15551	Body
RD10996	Rotor Nut	RD14776	Eared Washer	RD15552	Handle Screw Cap