SHIMANO

SAROS A-RB

SAR-4000FA

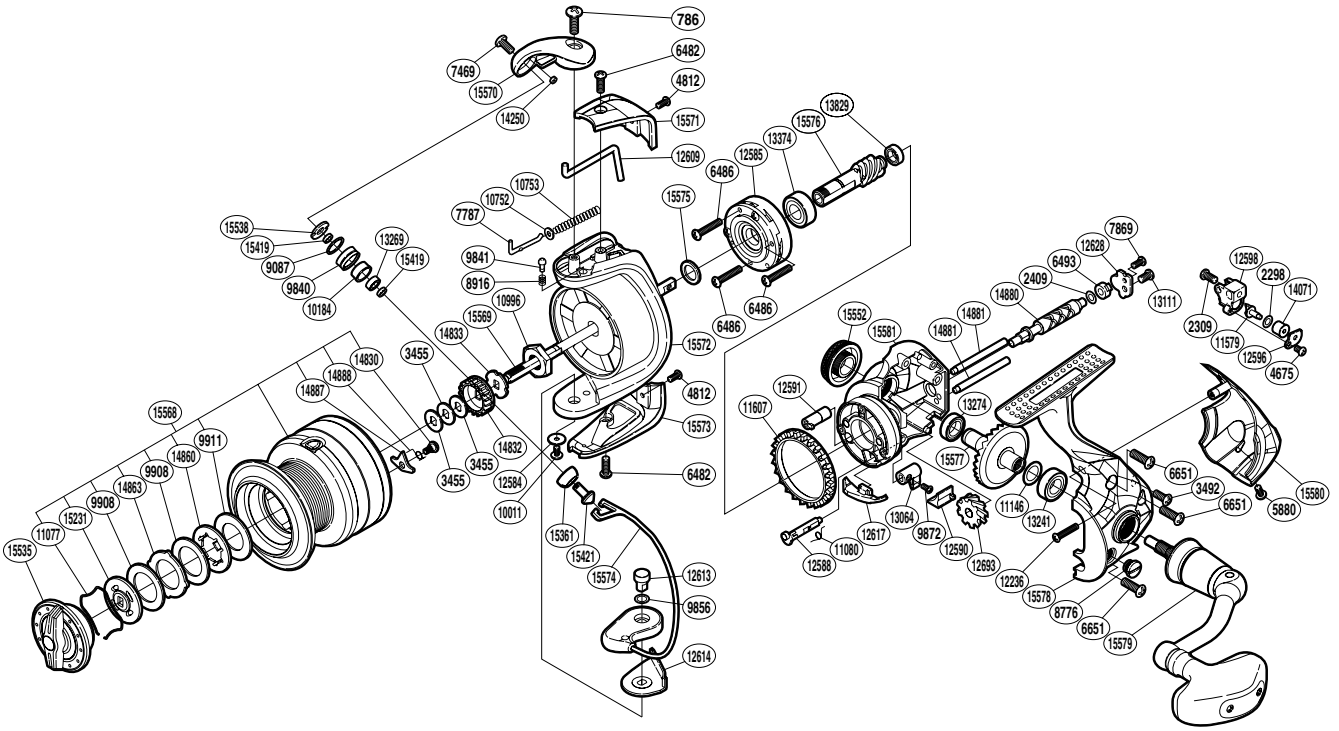

(1SE764001U)

Please note that the number of adjusting washers may not be the same as shown in the exploded views. (Adjustment will vary with each individual product.)

Part No.	Description	Part No.	Description	Part No.	Description
RD 0786	Screw	RD11077	Drag Washers Retainer	RD14833	Spool Support B
RD 2298	Spacer	RD11080	Anti-Reverse Cam Spring	RD14860	Key Washer
RD 2309	Screw	RD11146	Washer	RD14863	Eared Washer
RD 2409	Spacer	RD11579	Oscillating Pawl	RD14880	Worm Shaft
RD 3455	Spool Washer	RD11607	Friction Ring	RD14881	Oscillating Guide
RD 3492	Screw	RD12236	Screw	RD14887	Drag Click
RD 4675	Screw	RD12584	Washer	RD14888	Click Spring
RD 4812	Screw	RD12585	Roller Clutch Assembly	RD15231	Key Washer
RD 5880	Screw	RD12588	Anti-Reverse Cam	RD15361	Line Roller Support Cover
RD 6482	Screw	RD12590	Anti-Reverse Lever Cover	RD15419	Bearing Spacer
RD 6486	Screw	RD12591	Worm Bushing (front)	RD15421	Line Roller Support
RD 6493	Worm Bushing (rear)	RD12596	Oscillating Pawl Cover	RD15535	Drag Knob
RD 6651	Screw	RD12598	Oscillating Slider	RD15538	Line Roller Plate
RD 7469	Screw	RD12609	Bail Trip Lever	RD15552	Handle Screw Cap
RD 7787	Bail Spring Guide A	RD12613	Bail Hold Support Shaft	RD15568	Spool Assembly
RD 7869	Screw	RD12614	Bail Hold Support Spacer	RD15569	Main Shaft
RD 8776	Oil Cap	RD12617	Bail Trip Strike	RD15570	Bail Arm
RD 8916	Click Spring	RD12628	Worm Shaft Retainer	RD15571	Bail Spring Cover
RD 9087	Line Roller Spacer	RD12693	Idle Gear	RD15572	Rotor
RD 9840	Line Roller	RD13064	Anti-Reverse Lever	RD15573	Bail Hold Support Guard
RD 9841	Click Pin	RD13111	Screw	RD15574	Bail Assembly
RD 9856	Washer	RD13241	Ball Bearing	RD15575	Washer
RD 9872	Screw	RD13269	Ball Bearing	RD15576	Pinion Gear
RD 9908	Drag Washer	RD13274	Ball Bearing	RD15577	Drive Gear
RD 9911	Drag Washer	RD13374	Ball Bearing	RD15578	Side Cover
RD10011	Screw	RD13829	Ball Bearing	RD15579	Handle Assembly
RD10184	Line Roller Bushing	RD14071	Oscillating Slider Bushing	RD15580	Rear Protector
RD10752	Bail Spring Guide A Support	RD14250	Line Roller Oil Cap	RD15581	Body
RD10753	Bail Spring	RD14830	Screw		
RD10996	Rotor Nut	RD14832	Spool Support A		