SHIMANO

BAITRUNNER ST BTRST-4000FA

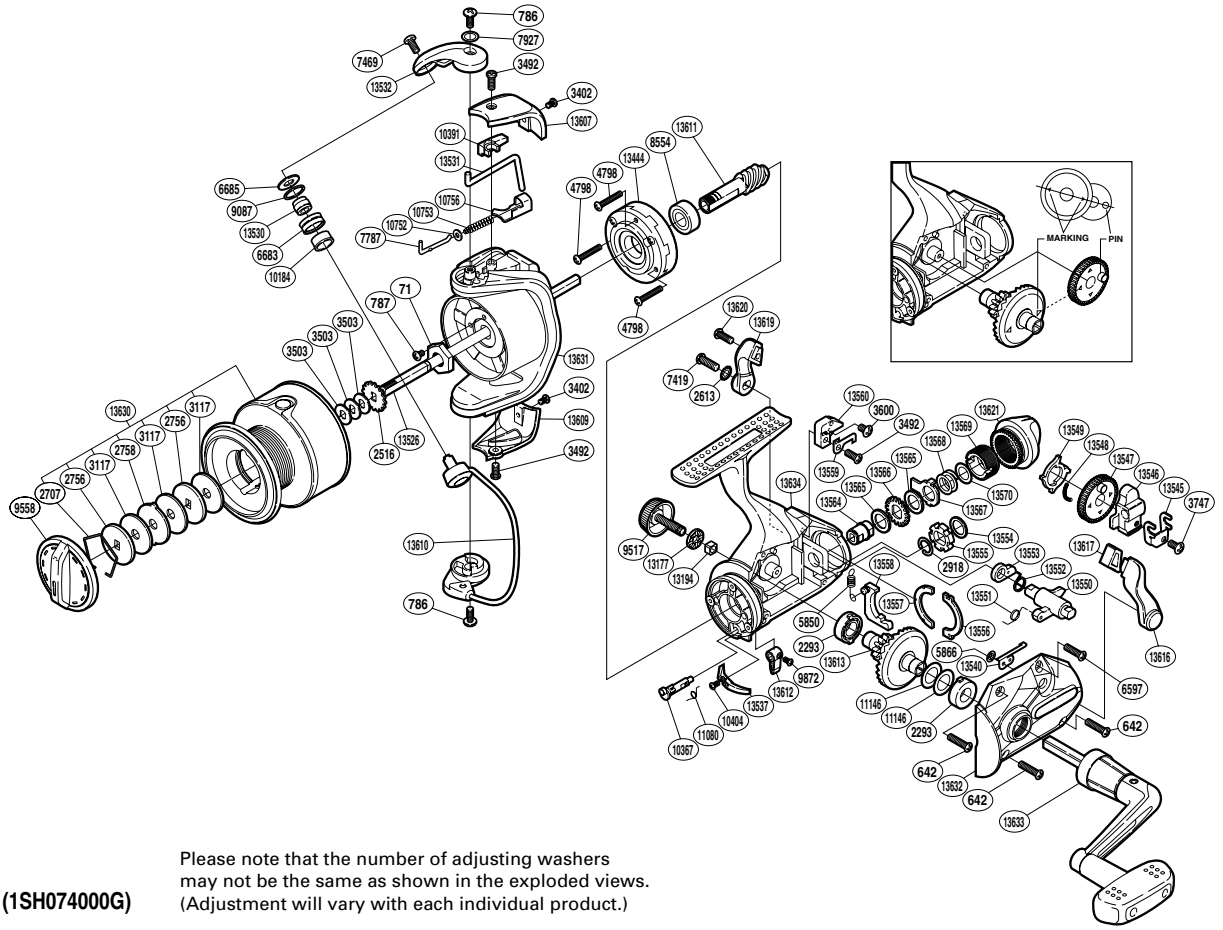

(1SH074000G)

Please note that the number of adjusting washers may not be the same as shown in the exploded views. (Adjustment will vary with each individual product.)

Part No.	Description	Part No.	Description	Part No.	Description
RD 0071	Rotor Nut	RD 9558	Drag Knob	RD13555	BaitRunner Ratchet
RD 0642	Screw	RD 9872	Screw	RD13556	Dial Retainer
RD 0786	Screw	RD10184	Line Roller Bushing	RD13557	Dial Retainer B
RD 0787	Screw	RD10367	Anti-Reverse Cam	RD13558	BaitRunner Pawl
RD 2293	Drive Gear Bushing	RD10391	Bail Trip Cover	RD13559	Dial Click
RD 2516	Spool Support	RD10404	Screw	RD13560	Dial Click Holder
RD 2613	Lock Washer	RD10752	Spring Guide A Support	RD13564	Free Spool Tension Shaft
RD 2707	Drag Washers Retainer	RD10753	Bail Spring	RD13565	Free Spool Tension Washer
RD 2756	Key Washer	RD10756	Bail Spring Seat	RD13566	Click Gear
RD 2758	Eared Washer	RD11080	Anti-Reverse Cam Spring	RD13567	Eared Washer
RD 2918	C Lock	RD11146	Washer	RD13568	Free Spool Tension Spring
RD 3117	Drag Washer	RD13177	Handle Screw Cap Spacer	RD13569	Free Spool Tension Screw
RD 3402	Screw	RD13194	Handle Screw Lock	RD13570	Washer
RD 3492	Screw	RD13444	Roller Clutch Assembly	RD13607	Bail Spring Cover
RD 3503	Spool Washer	RD13526	Main Shaft	RD13609	Bail Hold Support Guard
RD 3600	Screw	RD13530	Line Roller Collar	RD13610	Bail Assembly
RD 3747	Screw	RD13531	Bail Trip Lever	RD13611	Pinion Gear
RD 4798	Screw	RD13532	Bail Arm	RD13612	Anti-Reverse Lever
RD 5850	BaitRunner Pawl Spring	RD13537	Bail Trip Strike	RD13613	Drive Gear
RD 5866	Push Nut	RD13540	BaitRunner Click	RD13616	BaitRunner Lever Arm L
RD 6597	Screw	RD13545	Oscillating Slider Retainer	RD13617	BaitRunner Lever Bridge
RD 6683	Line Roller	RD13546	Oscillating Slider	RD13619	BaitRunner Lever Arm R
RD 6685	Line Roller Washer	RD13547	Oscillating Gear	RD13620	Screw
RD 7419	Screw	RD13548	Oscillating Gear Ratchet Spring	RD13621	BaitRunner Tension Dial
RD 7469	Screw	RD13549	Oscillating Gear Ratchet	RD13630	Spool Assembly
RD 7787	Bail Spring Guide A	RD13550	Clutch Arm	RD13631	Rotor
RD 7927	Washer	RD13551	Clutch Cam Spring	RD13632	Side Cover
RD 8554	Ball Bearing	RD13552	Clutch Spring	RD13633	Handle Assembly
RD 9087	Line Roller Spacer	RD13553	Clutch Cam	RD13634	Body
RD 9517	Handle Screw Cap	RD13554	Spacer		