SHIMANO®

CALAIS SA-RB

CL-200DC

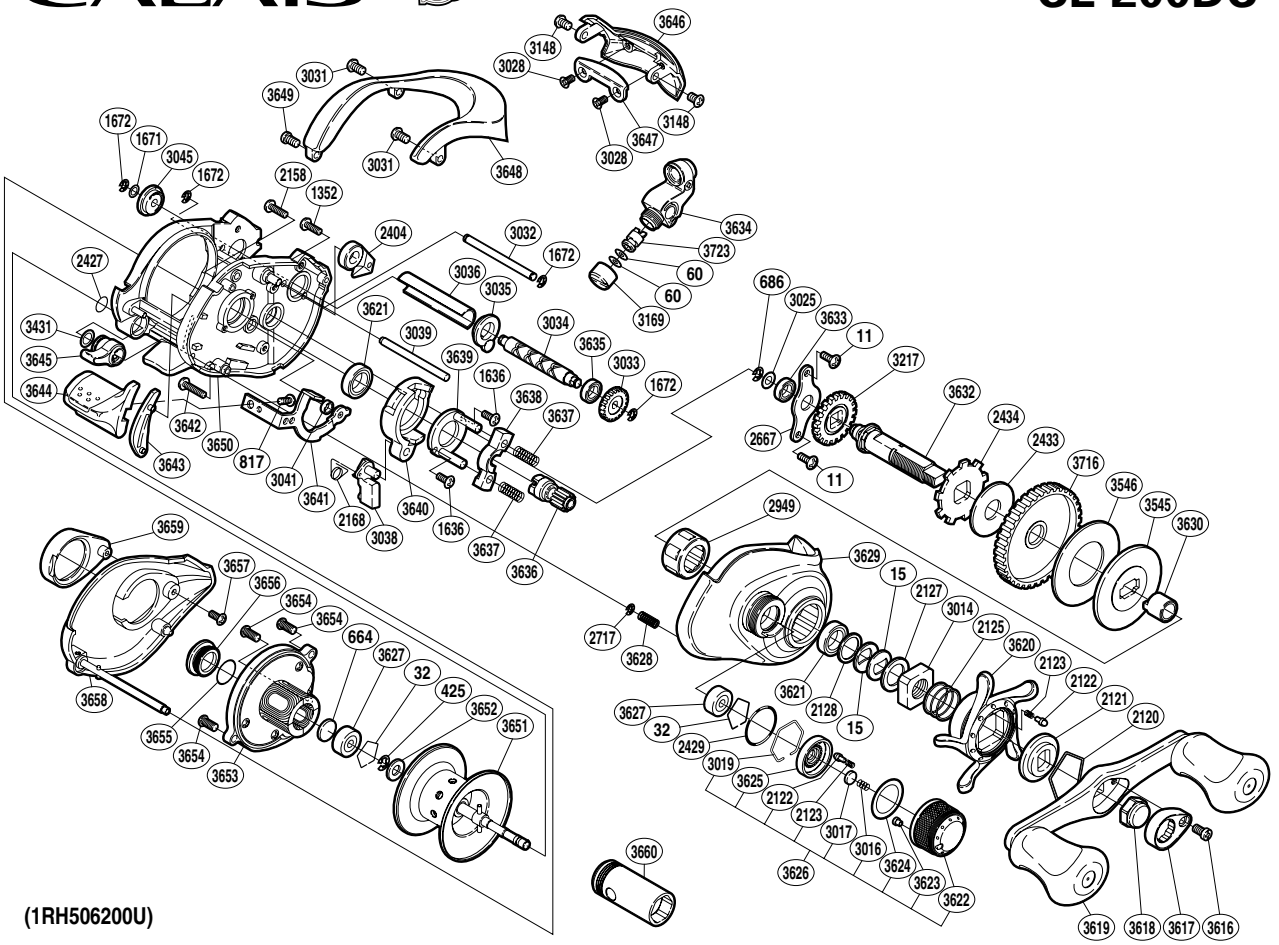

(1RH506200U)

Part No.	Description	Part No.	Description	Part No.	Description
BNT0011	Screw	BNT3025	Washer	BNT3632	Drive Shaft
BNT0015	Drag Spring Washer	BNT3028	Screw	BNT3633	Ball Bearing
BNT0032	Bearing Retainer	BNT3031	Screw	BNT3634	Line Guide
BNT0060	Spacer	BNT3032	Line Guard	BNT3635	Ball Bearing
BNT0425	E Lock	BNT3033	Idle Gear	BNT3636	Pinion Gear
BNT0664	Spacer B	BNT3034	Worm Shaft	BNT3637	Yoke Spring
BNT0686	E Lock	BNT3035	Worm Bushing A	BNT3638	Yoke
BNT0817	Screw	BNT3036	Level Wind Guard	BNT3639	Clutch Cam Retainer
BNT1352	Screw	BNT3038	Clutch Pawl	BNT3640	Clutch Cam
BNT1636	Screw	BNT3039	Level Wind Guide	BNT3641	Clutch Plate
BNT1671	Washer	BNT3041	Clutch Plate Shaft Support	BNT3642	Screw
BNT1672	E Lock	BNT3045	Worm Bushing B	BNT3643	Clutch Bar Guide B
BNT2120	Click Plate Retainer	BNT3148	Screw	BNT3644	Quick-Fire II Clutch Bar
BNT2121	Star Drag Click	BNT3169	Pawl Cap	BNT3645	Side Plate Cam Lever
BNT2122	Click Pin	BNT3217	Idle Gear	BNT3646	Level Wind Protector
BNT2123	Click Spring	BNT3431	Washer	BNT3647	Line Guard Retainer
BNT2125	Star Drag Spring	BNT3545	Key Washer	BNT3648	Thumb Rest
BNT2127	Star Drag Spacer	BNT3546	Drag Washer	BNT3649	Screw
BNT2128	Bearing Washer	BNT3616	Screw	BNT3650	One-Piece Frame
BNT2158	Screw	BNT3617	Handle Nut Plate	BNT3651	Spool Assembly
BNT2168	Clutch Pawl Spring	BNT3618	Handle Nut	BNT3652	Magnetic Plate
BNT2404	Anti-Reverse Pawl	BNT3619	Handle Assembly	BNT3653	Digital Control Assembly
BNT2427	O Ring	BNT3620	Star Drag	BNT3654	Screw
BNT2429	O Ring	BNT3621	Ball Bearing	BNT3655	O Ring
BNT2433	Drag Washer	BNT3622	Cast Control Cap	BNT3656	Oil Cap
BNT2434	Anti-Reverse Ratchet	BNT3623	Cast Control Cap Retainer	BNT3657	Screw
BNT2667	Drive Shaft Retainer	BNT3624	Retainer Sheet	BNT3658	Left Side Plate
BNT2717	E Lock	BNT3625	Cast Control Click Plate	BNT3659	BR Retainer
BNT2949	Roller Clutch Bearing	BNT3626	Cast Control Cap Assembly	BNT3716	Drive Gear
BNT3014	Star Drag Nut	BNT3627	Ball Bearing	BNT3723	Line Guide Pawl
BNT3016	Spool Tension Spring	BNT3628	Side Plate Spring		
BNT3017	Cast Control Spacer	BNT3629	Right Side Plate		
BNT3019	Cast Control Click Holder	BNT3630	Roller Clutch Inner Tube	BNT3660	Wrench (accessory)

(180607)