SHIMANO®

CALCUTTA TE

CTE-200DC

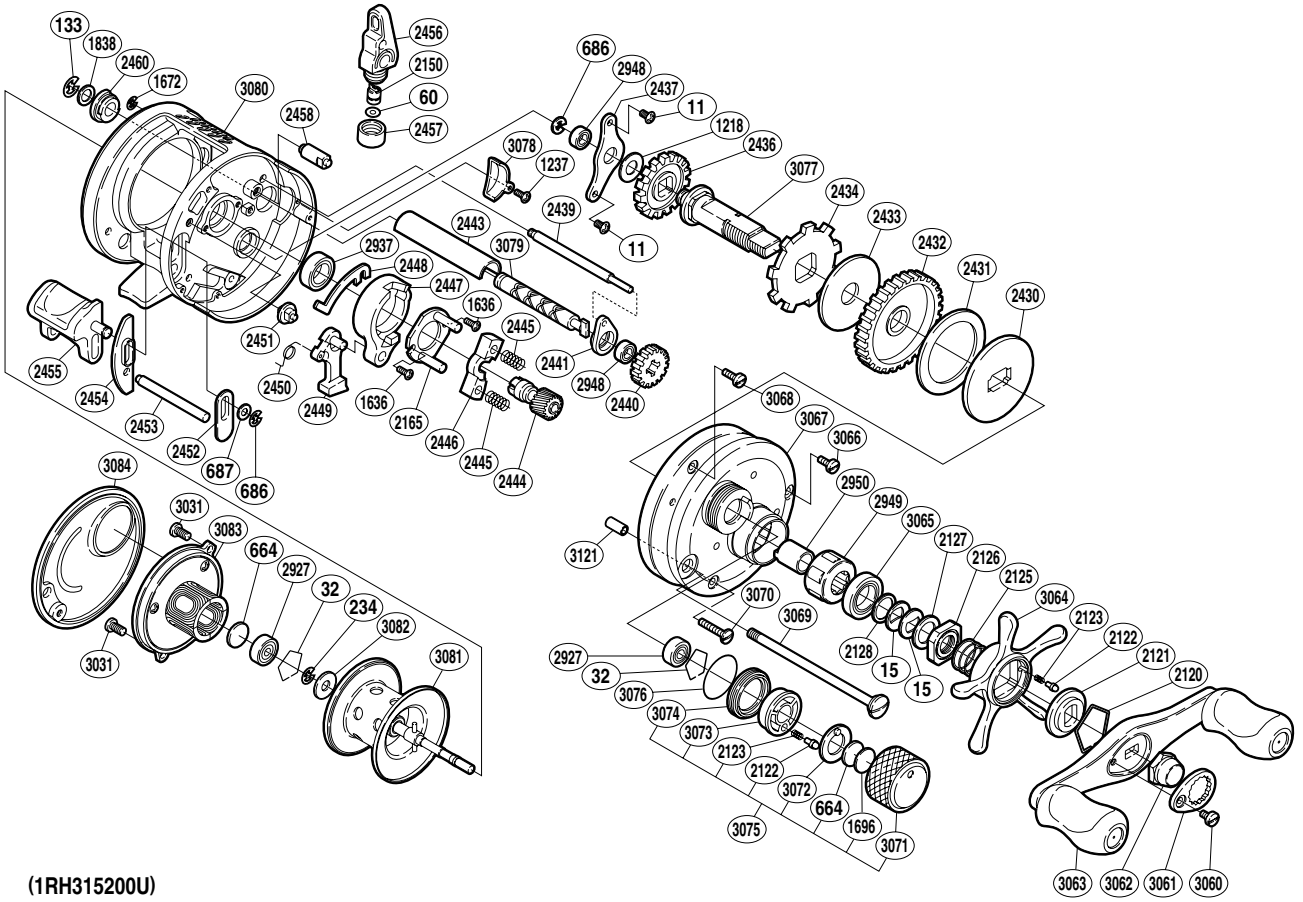

(1RH315200U)

Part No.	Description	Part No.	Description	Part No.	Description
BNT0011	Drive Shaft Retainer Screw	BNT2433	Drag Washer (A)	BNT2950	Roller Clutch Inner Tube
BNT0015	Drag Spring Washer	BNT2434	Anti-Reverse Ratchet	BNT3031	Digital Control Screw
BNT0032	Bearing Retainer	BNT2436	Idle Gear (A)	BNT3060	Handle Nut Plate Screw
BNT0060	Spacer (optional)	BNT2437	Drive Shaft Retainer	BNT3061	Handle Nut Plate
BNT0133	“E” Lock	BNT2439	Level Wind Guide	BNT3062	Handle Nut
BNT0234	“E” Lock	BNT2440	Idle Gear (C)	BNT3063	Handle Assembly
BNT0664	Spacer (B)	BNT2441	Worm Bushing (A)	BNT3064	Star Drag
BNT0686	“E” Lock	BNT2443	Level Wind Guard	BNT3065	Star Drag Bearing
BNT0687	Spacer	BNT2444	Pinion Gear	BNT3066	Right Side Plate Screw (C) (short)
BNT1218	Idle Gear (A) Spacer	BNT2445	Yoke Spring	BNT3067	Right Side Plate
BNT1237	Shield Screw	BNT2446	Yoke	BNT3068	Right Side Plate Screw (A)
BNT1636	Clutch Cam Screw	BNT2447	Clutch Cam	BNT3069	Side Plate Shaft
BNT1672	“E” Lock	BNT2448	Clutch Plate	BNT3070	Right Side Plate Screw (B) (long)
BNT1696	Cast Control Spacer (B)	BNT2449	Clutch Pawl	BNT3071	Cast Control Cap
BNT1838	Worm Shaft Spacer	BNT2450	Clutch Pawl Spring	BNT3072	Cast Control Click Plate
BNT2120	Click Plate Retainer	BNT2451	Set Pin	BNT3073	Click Pin Holder
BNT2121	Star Drag Click	BNT2452	Clutch Bar Guide (A)	BNT3074	Cast Control Click Holder
BNT2122	Click Pin	BNT2453	Clutch Bar Support	BNT3075	Cast Control Cap Assembly
BNT2123	Click Spring	BNT2454	Clutch Bar Guide (B)	BNT3076	“O” Ring
BNT2125	Star Drag Spring	BNT2455	Quick-Fire Ⅱ Clutch Bar	BNT3077	Drive Shaft
BNT2126	Star Drag Nut	BNT2456	Line Guide	BNT3078	Frame Shield
BNT2127	Star Drag Spacer	BNT2457	Pawl Cap	BNT3079	Worm Shaft
BNT2128	Bearing Washer	BNT2458	Anti-Reverse Pawl Pin	BNT3080	One-Piece Frame
BNT2150	Line Guide Pawl	BNT2460	Worm Bushing (B)	BNT3081	Spool Assembly
BNT2165	Clutch Cam Retainer	BNT2927	Ball Bearing	BNT3082	Magnetic Plate
BNT2430	Key Washer	BNT2937	Ball Bearing	BNT3083	Digital Control Assembly
BNT2431	Drag Washer (C)	BNT2948	Ball Bearing	BNT3084	Left Side Plate
BNT2432	Drive Gear	BNT2949	Roller Clutch Bearing	BNT3121	Side Plate Screw Collar