SHIMANO

EXAGE

EXG-3000SRB

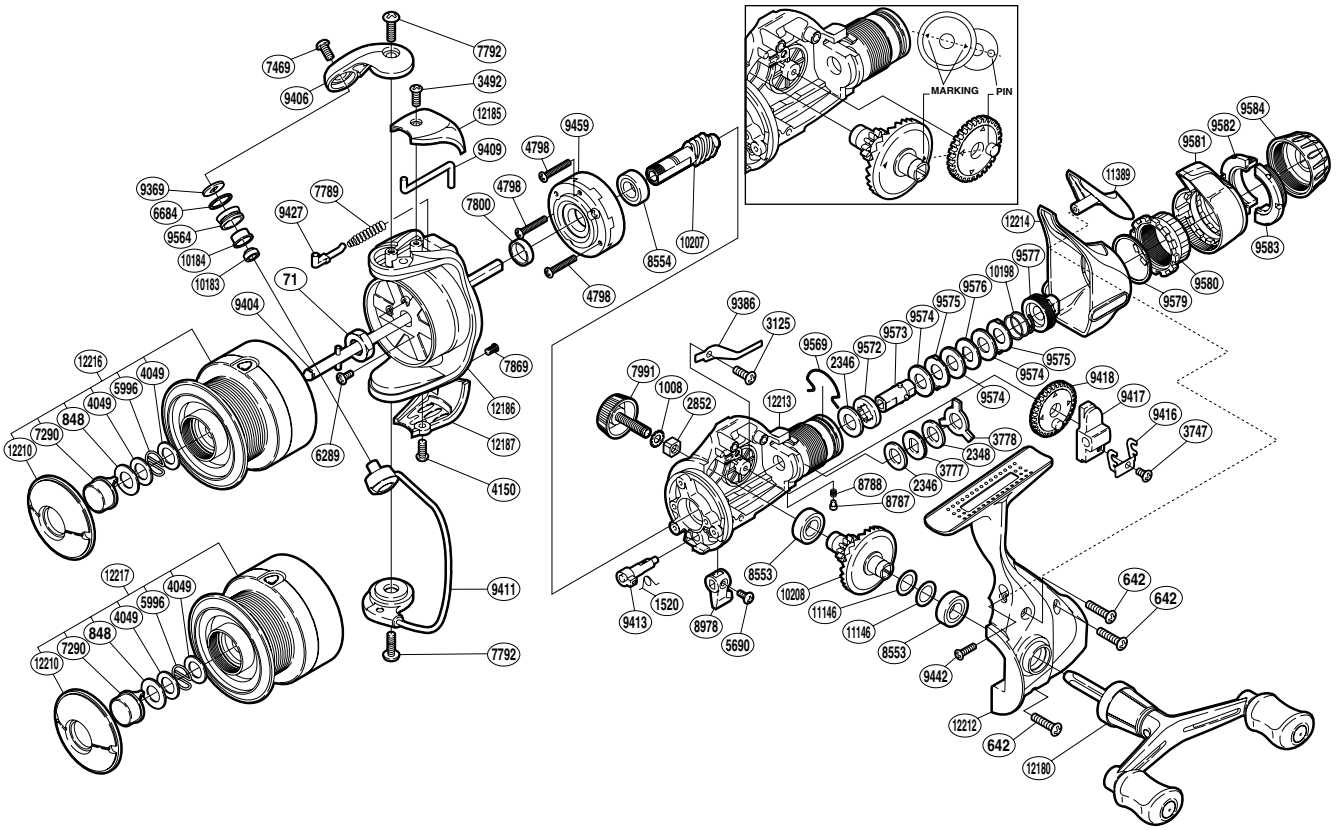

(1SG803101G)

Part No.	Description	Part No.	Description	Part No.	Description
RD 0071	Rotor Nut	RD 7991	Handle Screw Cap	RD 9577	Pressure Screw
RD 0642	Screw	RD 8553	Ball Bearing	RD 9579	Fightin' Pressure Screw Washer
RD 0848	Washer	RD 8554	Ball Bearing	RD 9580	Fightin' Pressure Screw
RD 1008	Handle Lock Washer	RD 8787	Click Pin	RD 9581	Fightin' Lever
RD 1520	Anti-Reverse Cam Spring	RD 8788	Click Spring	RD 9582	Drag Programmer B1
RD 2346	Drag Washer	RD 8978	Anti-Reverse Lever	RD 9583	Drag Programmer B2
RD 2348	Drag Washer	RD 9369	Line Roller Washer	RD 9584	Drag Programmer A
RD 2852	Handle Screw Lock	RD 9386	Drag Click	RD10183	Ball Bearing
RD 3125	Screw	RD 9404	Main Shaft	RD10184	Line Roller Bushing
RD 3492	Screw	RD 9406	Bail Arm	RD10198	Drag Coil Spring
RD 3747	Screw	RD 9409	Bail Trip Lever	RD10207	Pinion Gear
RD 3777	Click Gear	RD 9411	Bail Assembly	RD10208	Drive Gear
RD 3778	Eared Washer	RD 9413	Anti-Reverse Cam	RD11146	Washer
RD 4049	Washer	RD 9416	Oscillating Slider Retainer	RD11389	Rear Protector A
RD 4150	Screw	RD 9417	Oscillating Slider	RD12180	Double Paddle Handle Assembly
RD 4798	Screw	RD 9418	Oscillating Gear	RD12185	Bail Spring Cover
RD 5690	Screw	RD 9427	Bail Spring Guide	RD12186	Rotor
RD 5996	Locking Spring	RD 9442	Screw	RD12187	Bail Hold Support Guard
RD 6289	Screw	RD 9459	Roller Clutch Assembly	RD12210	Push Button Collar
RD 6684	Line Roller Spacer	RD 9564	Line Roller	RD12212	Side Cover
RD 7290	Push Button	RD 9569	Hold Click Spring	RD12213	Body
RD 7469	Screw	RD 9572	Drag Shaft B	RD12214	Rear Protector B
RD 7789	Bail Spring	RD 9573	Drag Shaft A	RD12216	Spool Assembly
RD 7792	Screw	RD 9574	Drag Washer		
RD 7800	Rotor Ring	RD 9575	Eared Washer		
RD 7869	Screw	RD 9576	Key Washer	RD12217	Spare Spool Assembly