# SHIMANO

## EXAGE

# EXG-3000SRC

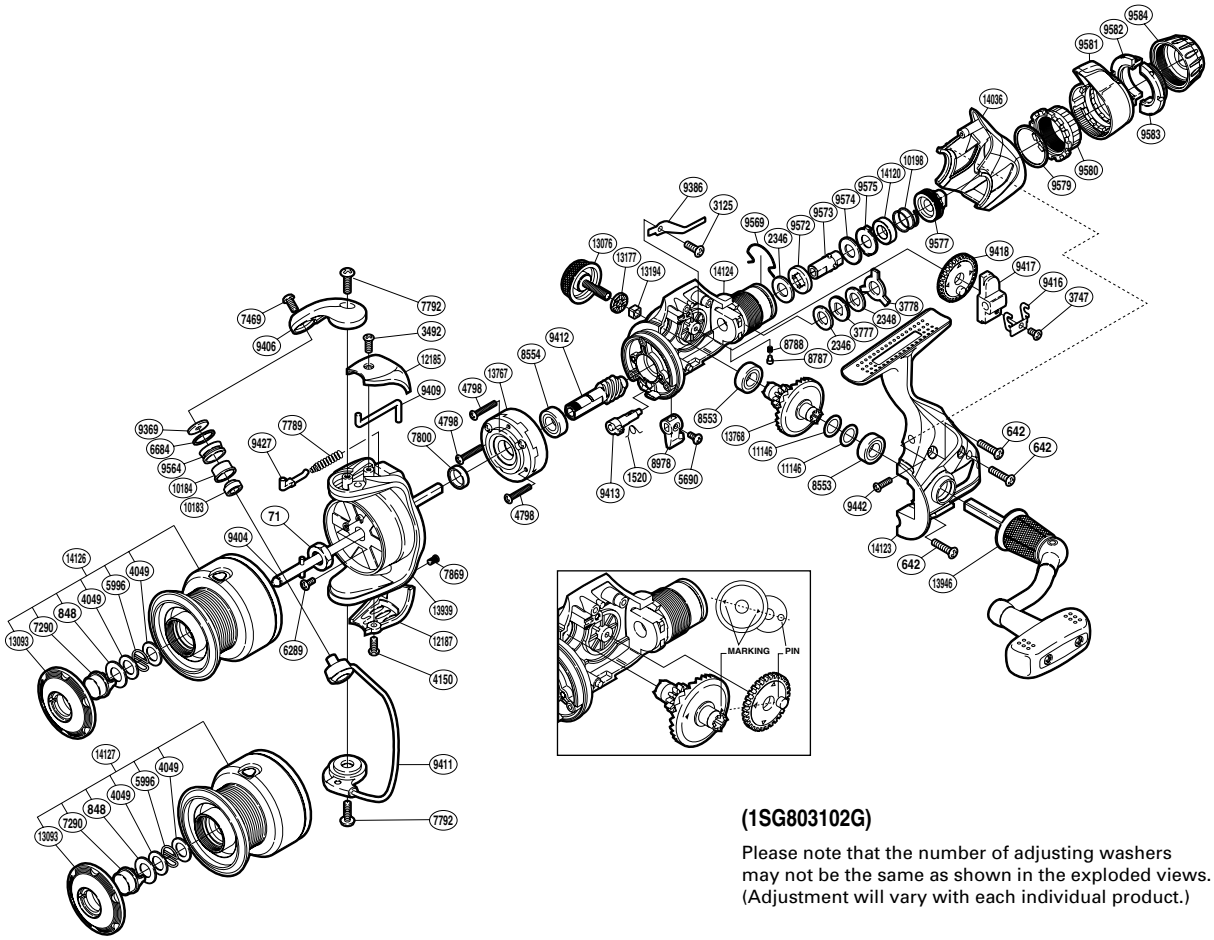


**(1SG803102G)**

Please note that the number of adjusting washers may not be the same as shown in the exploded views. (Adjustment will vary with each individual product.)

| Part No. | Description | Part No. | Description | Part No. | Description |
|---|---|---|---|---|---|
| RD 0071 | Rotor Nut | RD 8787 | Click Pin | RD 9582 | Drag Programmer B1 |
| RD 0642 | Screw | RD 8788 | Click Spring | RD 9583 | Drag Programmer B2 |
| RD 0848 | Washer | RD 8978 | Anti-Reverse Lever | RD 9584 | Drag Programmer A |
| RD 1520 | Anti-Reverse Cam Spring | RD 9369 | Line Roller Washer | RD10183 | Ball Bearing |
| RD 2346 | Drag Washer | RD 9386 | Drag Click | RD10184 | Line Roller Bushing |
| RD 2348 | Drag Washer | RD 9404 | Main Shaft | RD10198 | Drag Coil Spring |
| RD 3125 | Screw | RD 9406 | Bail Arm | RD11146 | Washer |
| RD 3492 | Screw | RD 9409 | Bail Trip Lever | RD12185 | Bail Spring Cover |
| RD 3747 | Screw | RD 9411 | Bail Assembly | RD12187 | Bail Hold Support Guard |
| RD 3777 | Click Gear | RD 9412 | Pinion Gear | RD13076 | Handle Screw Cap |
| RD 3778 | Eared Washer | RD 9413 | Anti-Reverse Cam | RD13093 | Push Button Collar |
| RD 4049 | Washer | RD 9416 | Oscillating Slider Retainer | RD13177 | Handle Screw Cap Spacer |
| RD 4150 | Screw | RD 9417 | Oscillating Slider | RD13194 | Handle Screw Lock |
| RD 4798 | Screw | RD 9418 | Oscillating Gear | RD13767 | Roller Clutch Assembly |
| RD 5690 | Screw | RD 9427 | Bail Spring Guide | RD13768 | Drive Gear |
| RD 5996 | Locking Spring | RD 9442 | Screw | RD13939 | Rotor |
| RD 6289 | Screw | RD 9564 | Line Roller | RD13946 | Handle Assembly |
| RD 6684 | Line Roller Spacer | RD 9569 | Hold Click Spring | RD14036 | Rear Protector |
| RD 7290 | Push Button | RD 9572 | Drag Shaft B | RD14120 | Drag Collar |
| RD 7469 | Screw | RD 9573 | Drag Shaft A | RD14123 | Side Cover |
| RD 7789 | Bail Spring | RD 9574 | Drag Washer | RD14124 | Body |
| RD 7792 | Screw | RD 9575 | Eared Washer | RD14126 | Spool Assembly |
| RD 7800 | Rotor Ring | RD 9577 | Pressure Screw | | |
| RD 7869 | Screw | RD 9579 | Fightin' Pressure Screw Washer | | |
| RD 8553 | Ball Bearing | RD 9580 | Fightin' Pressure Screw | | |
| RD 8554 | Ball Bearing | RD 9581 | Fightin' Lever | RD14127 | Spare Spool Assembly |