SHIMANO

NEXAVE

NEX-2500FB

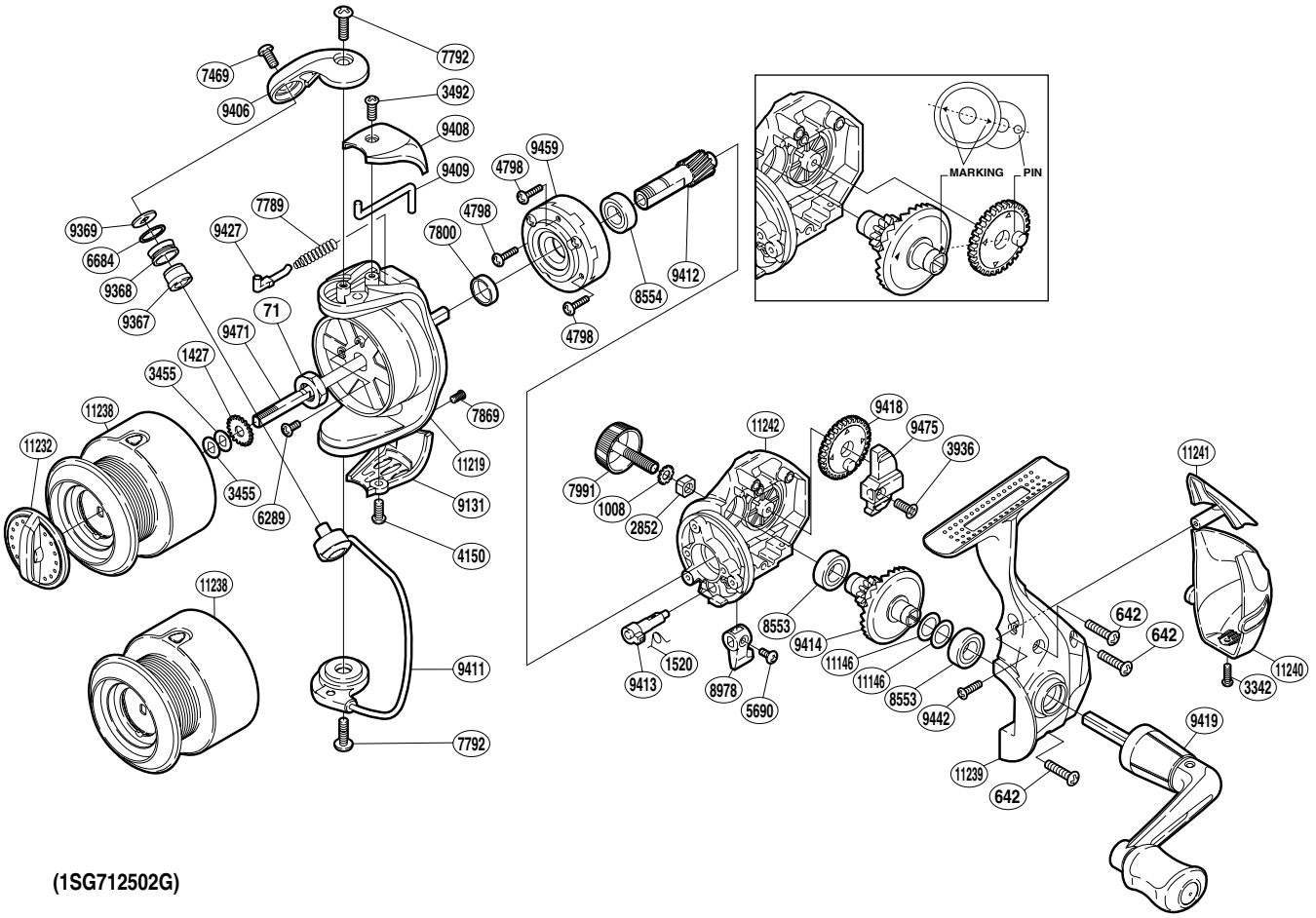

(1SG712502G)

Part No.	Description	Part No.	Description	Part No.	Description
RD 0071	Rotor Nut	RD 7792	Screw	RD 9414	Drive Gear
RD 0642	Screw	RD 7800	Rotor Ring	RD 9418	Oscillating Gear
RD 1008	Handle Lock Washer	RD 7869	Screw	RD 9419	Handle Assembly
RD 1427	Spool Support	RD 7991	Handle Screw Cap	RD 9427	Bail Spring Guide
RD 1520	Anti-Reverse Cam Spring	RD 8553	Ball Bearing	RD 9442	Screw
RD 2852	Handle Screw Lock	RD 8554	Ball Bearing	RD 9459	Roller Clutch Assembly
RD 3342	Screw	RD 8978	Anti-Reverse Lever	RD 9471	Main Shaft
RD 3455	Spool Washer	RD 9131	Bail Hold Support Guard	RD 9475	Oscillating Slider
RD 3492	Screw	RD 9367	Line Roller Bushing	RD11146	Washer
RD 3936	Screw	RD 9368	Line Roller	RD11219	Rotor
RD 4150	Screw	RD 9369	Line Roller Washer	RD11232	Drag Knob
RD 4798	Screw	RD 9406	Bail Arm	RD11238	Spool Assembly
RD 5690	Screw	RD 9408	Bail Spring Cover	RD11239	Side Cover
RD 6289	Screw	RD 9409	Bail Trip Lever	RD11240	Rear Protector B
RD 6684	Line Roller Spacer	RD 9411	Bail Assembly	RD11241	Rear Protector A
RD 7469	Screw	RD 9412	Pinion Gear	RD11242	Body
RD 7789	Bail Spring	RD 9413	Anti-Reverse Cam		