SHIMANO

SUPER

SUP-2500GTMRC

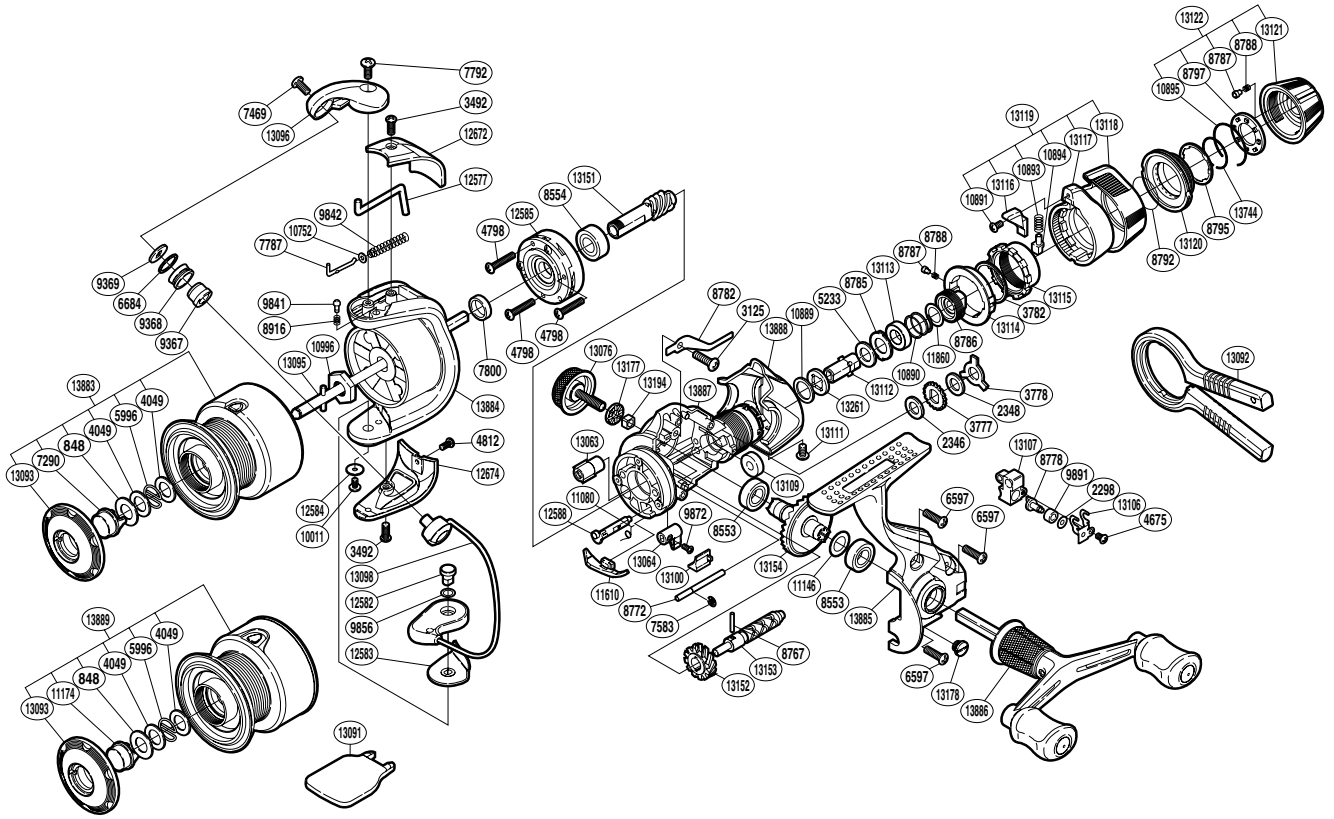

(1SG472503G)

Please note that the number of adjusting washers may not be the same as shown in the exploded views. (Adjustment will vary with each individual product.)

Part No.	Description	Part No.	Description	Part No.	Description
RD 0848	Washer	RD 9367	Line Roller Bushing	RD13106	Oscillating Slider Retainer
RD 2298	Spacer	RD 9368	Line Roller	RD13107	Oscillating Slider
RD 2346	Drag Washer	RD 9369	Line Roller Washer	RD13109	Drag Shaft C
RD 2348	Drag Washer	RD 9841	Click Pin	RD13111	Screw
RD 3125	Screw	RD 9842	Bail Spring	RD13112	Drag Shaft A
RD 3492	Screw	RD 9856	Washer	RD13113	Drag Collar
RD 3777	Click Gear	RD 9872	Screw	RD13114	Lever Click Gear
RD 3778	Eared Washer	RD 9891	Oscillating Slider Bushing	RD13115	Fightin' Pressure Screw
RD 3782	Fightin' Pressure Screw Washer	RD10011	Screw	RD13116	Fightin' Lever Inner B
RD 4049	Washer	RD10752	Spring Guide A Support	RD13117	Fightin' Lever Inner A
RD 4675	Screw	RD10889	Drag Washer	RD13118	Fightin' Lever Outer
RD 4798	Screw	RD10890	Drag Coil Spring	RD13119	Fightin' Lever Assembly
RD 4812	Screw	RD10891	Screw	RD13120	Drag Programmer B
RD 5233	Drag Washer	RD10893	Position Pin Spring	RD13121	Drag Programmer A
RD 5996	Locking Spring	RD10894	Lever Position Pin	RD13122	Drag Programmer Assembly
RD 6597	Screw	RD10895	Click Plate Retainer	RD13151	Pinion Gear
RD 6684	Line Roller Spacer	RD10996	Rotor Nut	RD13152	Idle Gear
RD 7290	Push Button	RD11080	Anti-Reverse Cam Spring	RD13153	Worm Shaft
RD 7469	Screw	RD11146	Washer	RD13154	Drive Gear
RD 7583	E Lock	RD11610	Bail Trip Strike	RD13177	Handle Screw Cap Spacer
RD 7787	Bail Spring Guide A	RD11860	Washer	RD13178	Oil Cap
RD 7792	Screw	RD12577	Bail Trip Lever	RD13194	Handle Screw Lock
RD 7800	Rotor Ring	RD12582	Bail Hold Support Shaft	RD13261	Drag Shaft B
RD 8553	Ball Bearing	RD12583	Bail Hold Support Spacer	RD13744	Drag Knob Retainer
RD 8554	Ball Bearing	RD12584	Washer	RD13883	Spool Assembly
RD 8767	Worm Shaft Pin	RD12585	Roller Clutch Assembly	RD13884	Rotor
RD 8772	Oscillating Guide	RD12588	Anti-Reverse Cam	RD13885	Side Cover
RD 8778	Oscillating Pawl	RD12672	Bail Spring Cover	RD13886	Double Paddle Handle Assembly
RD 8782	Drag Click	RD12674	Bail Hold Support Guard	RD13887	Body
RD 8785	Eared Washer	RD13063	Worm Bushing	RD13888	Rear Protector
RD 8786	Pressure Screw	RD13064	Anti-Reverse Lever		
RD 8787	Click Pin	RD13076	Handle Screw Cap	RD11174	Push Button
RD 8788	Click Spring	RD13093	Push Button Collar	RD13889	Spare Spool Assembly
RD 8792	Drag Knob Friction Ring	RD13095	Main Shaft		
RD 8795	Drag Knob Washer	RD13096	Bail Arm		
RD 8797	Click Plate	RD13098	Bail Assembly	RD13091	Spool Wrench (accessory)
RD 8916	Click Spring	RD13100	Anti-Reverse Lever Cover	RD13092	Knob Wrench (accessory)