SHIMANO

SUPER

SUP-4000GTMRC

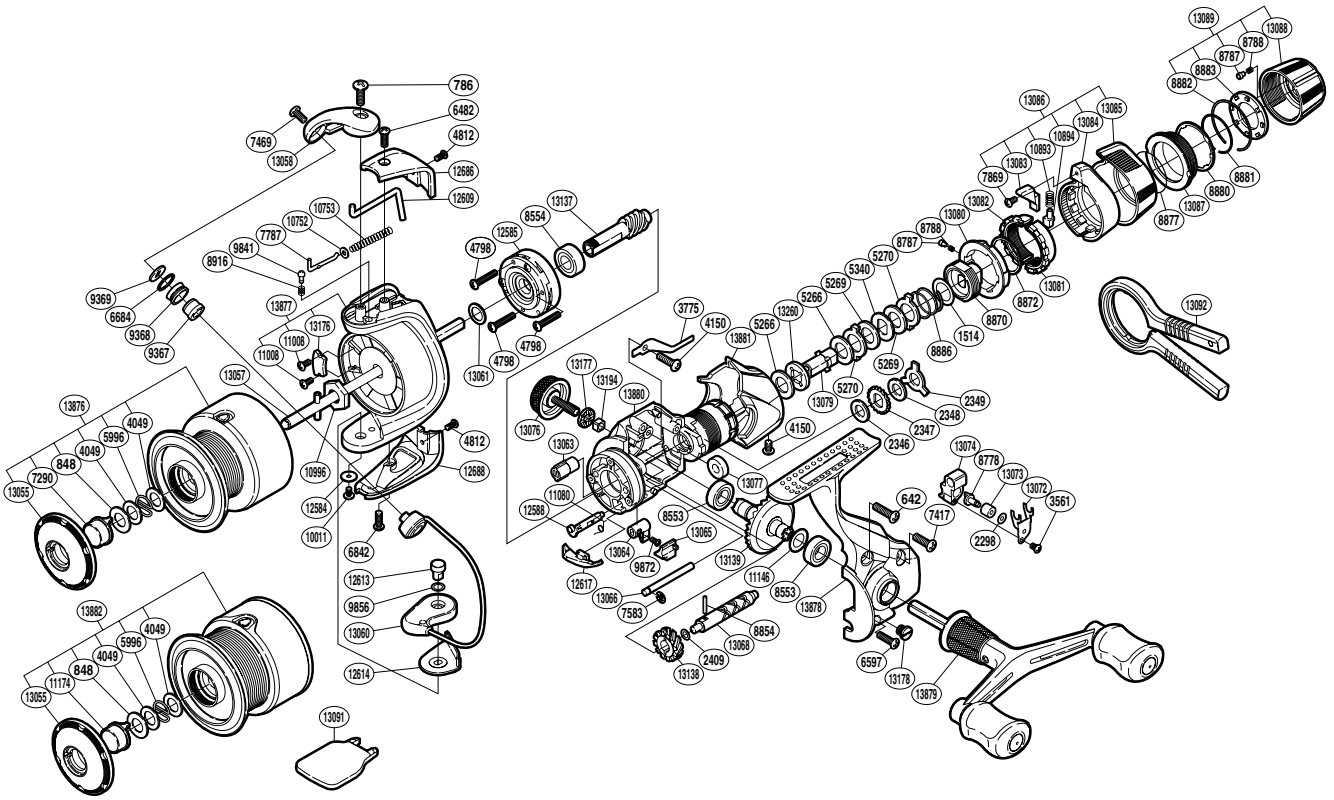

(1SG474003G)

Please note that the number of adjusting washers may not be the same as shown in the exploded views. (Adjustment will vary with each individual product.)

Part No.	Description	Part No.	Description	Part No.	Description
RD 0642	Screw	RD 8880	Drag Knob Washer	RD13068	Worm Shaft
RD 0786	Screw	RD 8881	Drag Knob Retainer	RD13072	Oscillating Slider Retainer
RD 0848	Washer	RD 8882	Click Plate Retainer	RD13073	Oscillating Slider Bushing
RD 1514	Washer	RD 8883	Click Plate	RD13074	Oscillating Slider
RD 2298	Spacer	RD 8886	Drag Coil Spring	RD13076	Handle Screw Cap
RD 2346	Drag Washer	RD 8916	Click Spring	RD13077	Drag Shaft C
RD 2347	Click Gear	RD 9367	Line Roller Bushing	RD13079	Drag Shaft A
RD 2348	Drag Washer	RD 9368	Line Roller	RD13080	Lever Click Gear
RD 2349	Eared Washer	RD 9369	Line Roller Washer	RD13081	Fightin' Pressure Screw
RD 2409	Spacer	RD 9841	Click Pin	RD13082	Fightin' Pressure Screw B
RD 3561	Screw	RD 9856	Washer	RD13083	Fightin' Lever Inner B
RD 3775	Drag Click	RD 9872	Screw	RD13084	Fightin' Lever Inner A
RD 4049	Washer	RD10011	Screw	RD13085	Fightin' Lever Outer
RD 4150	Screw	RD10752	Spring Guide A Support	RD13086	Fightin' Lever Assembly
RD 4798	Screw	RD10753	Bail Spring	RD13087	Drag Programmer B
RD 4812	Screw	RD10893	Position Pin Spring	RD13088	Drag Programmer A
RD 5266	Drag Washer	RD10894	Lever Position Pin	RD13089	Drag Programmer Assembly
RD 5269	Drag Washer	RD10996	Rotor Nut	RD13137	Pinion Gear
RD 5270	Eared Washer	RD11008	Screw	RD13138	Idle Gear
RD 5340	Key Washer	RD11080	Anti-Reverse Cam Spring	RD13139	Drive Gear
RD 5996	Locking Spring	RD11146	Washer	RD13176	Counter Weight
RD 6482	Screw	RD12584	Washer	RD13177	Handle Screw Cap Spacer
RD 6597	Screw	RD12585	Roller Clutch Assembly	RD13178	Oil Cap
RD 6684	Line Roller Spacer	RD12588	Anti-Reverse Cam	RD13194	Handle Screw Lock
RD 7290	Push Button	RD12609	Bail Trip Lever	RD13260	Drag Shaft B
RD 7417	Screw	RD12613	Bail Hold Support Shaft	RD13876	Spool Assembly
RD 7469	Screw	RD12614	Bail Hold Support Spacer	RD13877	Rotor
RD 7583	E Lock	RD12617	Bail Trip Strike	RD13878	Side Cover
RD 7787	Bail Spring Guide A	RD12686	Bail Spring Cover	RD13879	Double Paddle Handle Assembly
RD 7869	Screw	RD12688	Bail Hold Support Guard	RD13880	Body
RD 8553	Ball Bearing	RD13055	Push Button Collar	RD13881	Rear Protector
RD 8554	Ball Bearing	RD13057	Main Shaft		
RD 8778	Oscillating Pawl	RD13058	Bail Arm	RD11174	Push Button
RD 8787	Click Pin	RD13060	Bail Assembly	RD13882	Spare Spool Assembly
RD 8788	Click Spring	RD13061	Washer		
RD 8854	Worm Shaft Pin	RD13063	Worm Bushing		
RD 8870	Pressure Screw	RD13064	Anti-Reverse Lever		
RD 8872	Fightin' Pressure Screw Washer	RD13065	Anti-Reverse Lever Cover	RD13091	Spool Wrench (accessory)
RD 8877	Drag Knob Friction Ring	RD13066	Oscillating Guide	RD13092	Knob Wrench (accessory)