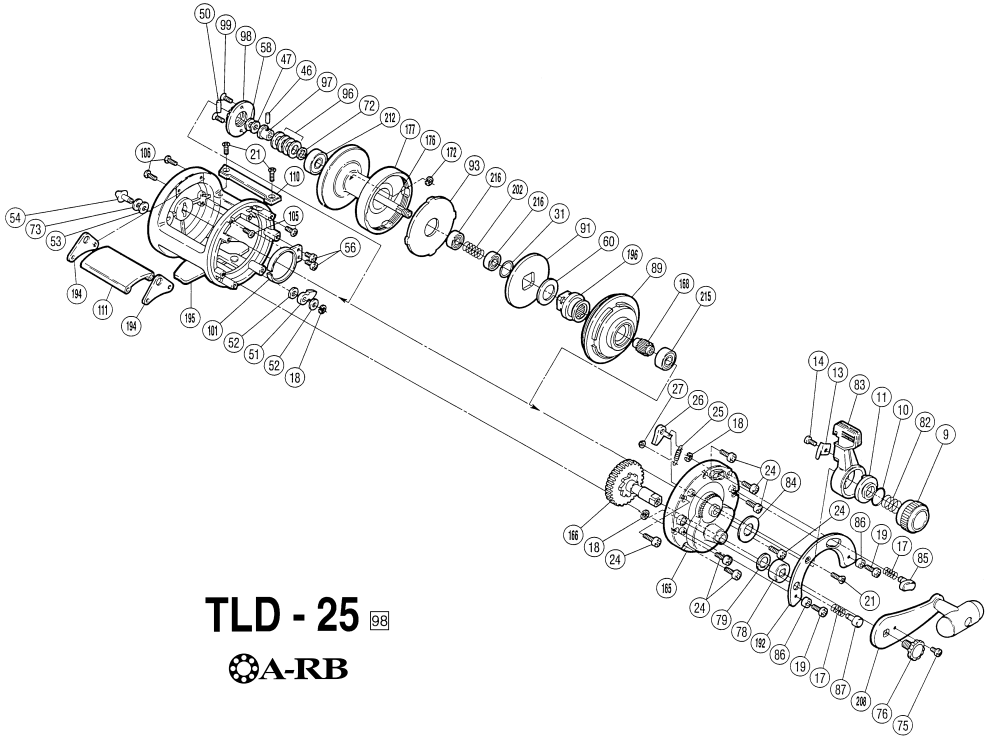

TLD - 25 98

A-RB

TLD No.	PARTS NAMES	TLD No.	PARTS NAMES	TLD No.	PARTS NAMES
0009	Pre-Program Dial	0056	Click Spring Screw	0099	Click Gear Screw
0010	Body “O” Seal	0058	Spacer B	0101	Click Spring
0011	Lever Shaft Body	0060	Pre-Load Spring A	0105	Cross Bar Bolt A
0013	Lever Click Spring	0072	Pre-Load Washer A	0106	Cross Bar Bolt B
0014	Click Spring Screw	0073	Click Button Washer B	0110	Line Guard
0017	Pressure Spring	0075	Handle Screw (B)	0111	Cross Bar
0018	“C” Lock	0076	Handle Screw (A)	0165	Side Plate
0019	Quadrant Anchor Bolt	0078	Gear Shaft Shield	0166	Main Gear
0021	Quadrant Screw	0079	Gear Shaft Thrust Washer	0168	Pinion Gear
0024	Side Plate Bolt	0082	Dial Spring	0172	“C” Lock
0025	Dog Spring	0083	Drag Control Lever	0176	Main Shaft
0026	Dog	0084	Lever Thrust Ring	0177	Spool
0027	Dog Spring Retainer	0085	Strike Stop	0192	Lever Quadrant
0031	Seal Lock	0086	Bolt Shield	0194	Harness Lug
0046	Cross Pin A	0087	Free Spool Detent	0195	One-Piece Body
0047	Spacer A	0089	Cooling Shield	0196	Pinion Guard
0050	Cross Pin B	0091	Drag Plate	0202	Pressure Release Spring
0051	Click Pawl	0093	Titanium Drag Washer	0208	Handle
0052	Click Pawl Washer	0096	Pre-Load Spring B	0212	Ball Bearing
0053	Click Button Washer A	0097	Pre-Load Body	0215	Ball Bearing
0054	Click Button	0098	Click Gear	0216	Ball Bearing

(141101)