SHIMANO®

TORIUM

TOR-16

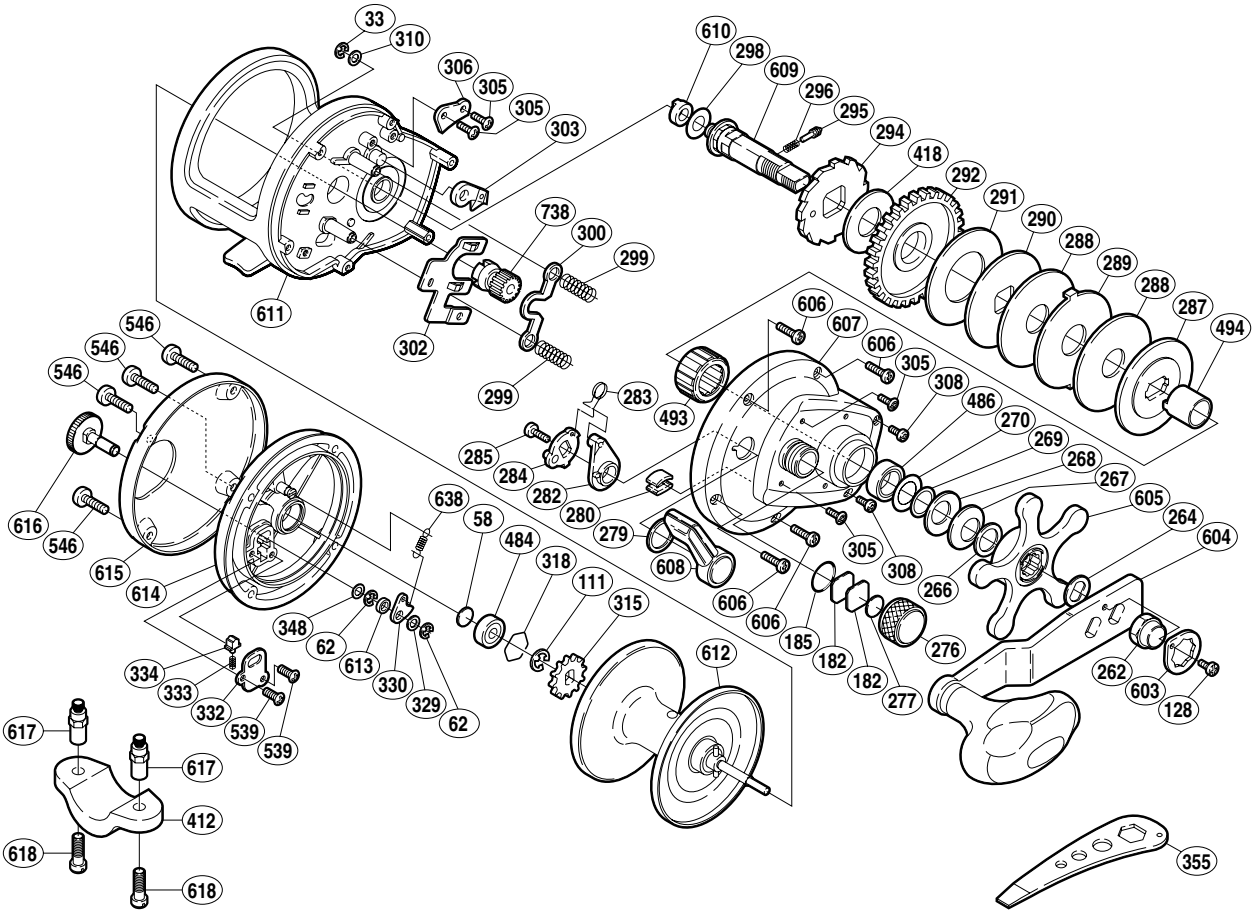

Part No.	Description	Part No.	Description	Part No.	Description
TGT0033	Drive Shaft Retainer	TGT0291	Drag Washer (B)	TGT0494	Roller Clutch Inner Tube
TGT0058	Spacer “B”	TGT0292	Drive Gear	TGT0539	Click Spring Retainer Screw
TGT0062	Click Pawl Retainer	TGT0294	Anti-Reverse Ratchet	TGT0546	Left Side Plate Screw
TGT0111	Click Gear Retainer	TGT0295	Click Pin	TGT0603	Handle Nut Plate
TGT0128	Handle Nut Plate Screw	TGT0296	Click Spring	TGT0604	Handle Assembly
TGT0182	Cast Control Spacer (A)	TGT0298	Drive Shaft Washer (B)	TGT0605	Star Drag
TGT0185	“O” Ring	TGT0299	Yoke Spring	TGT0606	Right Side Plate Screw (A)
TGT0262	Handle Nut	TGT0300	Yoke	TGT0607	Right Side Plate
TGT0264	Drive Shaft Shield	TGT0302	Yoke Plate	TGT0608	Clutch Lever
TGT0266	Star Drag Washer	TGT0303	Anti-Reverse Pawl	TGT0609	Drive Shaft
TGT0267	Drag Spring Washer (9L)	TGT0305	Multi-Purpose Screw	TGT0610	Drive Shaft Bushing
TGT0268	Drag Spring Washer (9H)	TGT0306	Anti-Reverse Pawl Keeper	TGT0611	One-Piece Frame
TGT0269	Bearing Thrust Washer	TGT0308	Right Side Plate Screw (D)	TGT0612	Spool Assembly
TGT0270	Bearing Seal	TGT0310	Drive Shaft Washer (A)	TGT0613	Click Pawl Spacer
TGT0276	Cast Control Cap	TGT0315	Click Gear	TGT0614	Left Side Plate
TGT0277	Cast Control Spacer (B)	TGT0318	Bearing Retainer	TGT0615	Left Side Plate Cover
TGT0279	Smoother	TGT0329	Spacer (B)	TGT0616	Click Button
TGT0280	Line Clip	TGT0330	Click Pawl	TGT0638	Click Pawl Spring
TGT0282	Eccentric Cam Bushing	TGT0332	Click Spring Retainer	TGT0738	Pinion Gear
TGT0283	Clutch Spring	TGT0333	Click Spring		
TGT0284	Clutch Cam	TGT0334	Click Spring Holder		
TGT0285	Clutch Lever Screw	TGT0348	Spacer (C)	TGT0412	Rod Clamp (accessory)
TGT0287	Key Washer	TGT0418	Drag Washer (A)	TGT0617	Rod Clamp Nut (accessory)
TGT0288	Drag Washer (D)	TGT0484	Ball Bearing	TGT0618	Rod Clamp Bolt (accessory)
TGT0289	Eared Washer (E)	TGT0486	Ball Bearing		
TGT0290	Key Washer (C)	TGT0493	Roller Clutch Bearing	TGT0355	Wrench (accessory)

(150820)