SHIMANO

TWIN POWER SA-RB

TP-4000FC

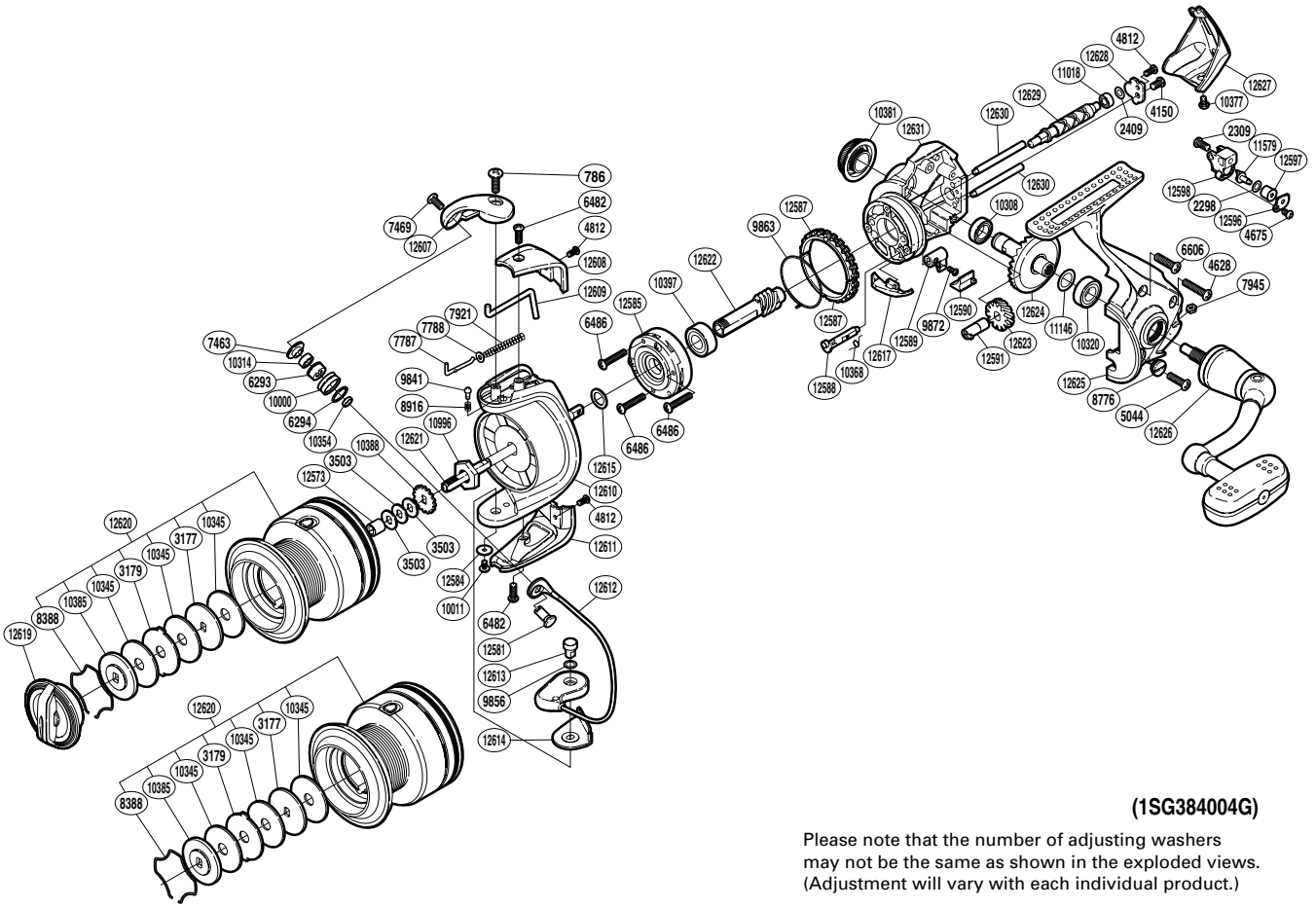

(1SG384004G)

Please note that the number of adjusting washers may not be the same as shown in the exploded views. (Adjustment will vary with each individual product.)

Part No.	Description	Part No.	Description	Part No.	Description
RD 0786	Screw	RD 9863	Friction Spring	RD12596	Oscillating Pawl Cover
RD 2298	Spacer	RD 9872	Screw	RD12597	Oscillating Slider Bushing
RD 2309	Screw	RD10000	Line Roller	RD12598	Oscillating Slider
RD 2409	Spacer	RD10011	Screw	RD12607	Bail Arm
RD 3177	Key Washer	RD10308	Ball Bearing	RD12608	Bail Spring Cover
RD 3179	Eared Washer	RD10314	Ball Bearing	RD12609	Bail Trip Lever
RD 3503	Spool Washer	RD10320	Ball Bearing	RD12610	Rotor
RD 4150	Screw	RD10345	Drag Washer	RD12611	Bail Hold Support Guard
RD 4628	Screw	RD10354	Bearing Spacer	RD12612	Bail Assembly
RD 4675	Screw	RD10368	Anti-Reverse Cam Spring	RD12613	Bail Hold Support Shaft
RD 4812	Screw	RD10377	Screw	RD12614	Bail Hold Support Spacer
RD 5044	Screw	RD10381	Handle Screw Cap	RD12615	Washer
RD 6293	Line Roller Bushing	RD10385	Key Washer	RD12617	Bail Trip Strike
RD 6294	Line Roller Spacer	RD10388	Spool Support	RD12619	Drag Knob
RD 6482	Screw	RD10397	Ball Bearing	RD12620	Spool Assembly
RD 6486	Screw	RD10996	Rotor Nut	RD12621	Main Shaft
RD 6606	Screw	RD11018	Ball Bearing	RD12622	Pinion Gear
RD 7463	Line Roller Washer	RD11146	Washer	RD12623	Idle Gear
RD 7469	Screw	RD11579	Oscillating Pawl	RD12624	Drive Gear
RD 7787	Bail Spring Guide A	RD12573	Spool Support Collar	RD12625	Side Cover
RD 7788	Spring Guide A Support	RD12581	Line Roller Support	RD12626	Handle Assembly
RD 7921	Bail Spring	RD12584	Washer	RD12627	Rear Protector
RD 7945	Nut	RD12585	Roller Clutch Assembly	RD12628	Worm Shaft Retainer
RD 8388	Drag Washers Retainer	RD12587	Friction Ring	RD12629	Worm Shaft
RD 8776	Oil Cap	RD12588	Anti-Reverse Cam	RD12630	Oscillating Guide
RD 8916	Click Spring	RD12589	Anti-Reverse Lever	RD12631	Body
RD 9841	Click Pin	RD12590	Anti-Reverse Lever Cover		
RD 9856	Washer	RD12591	Worm Bushing (front)		