SHIMANO®

STELLA®

STL-20000FA

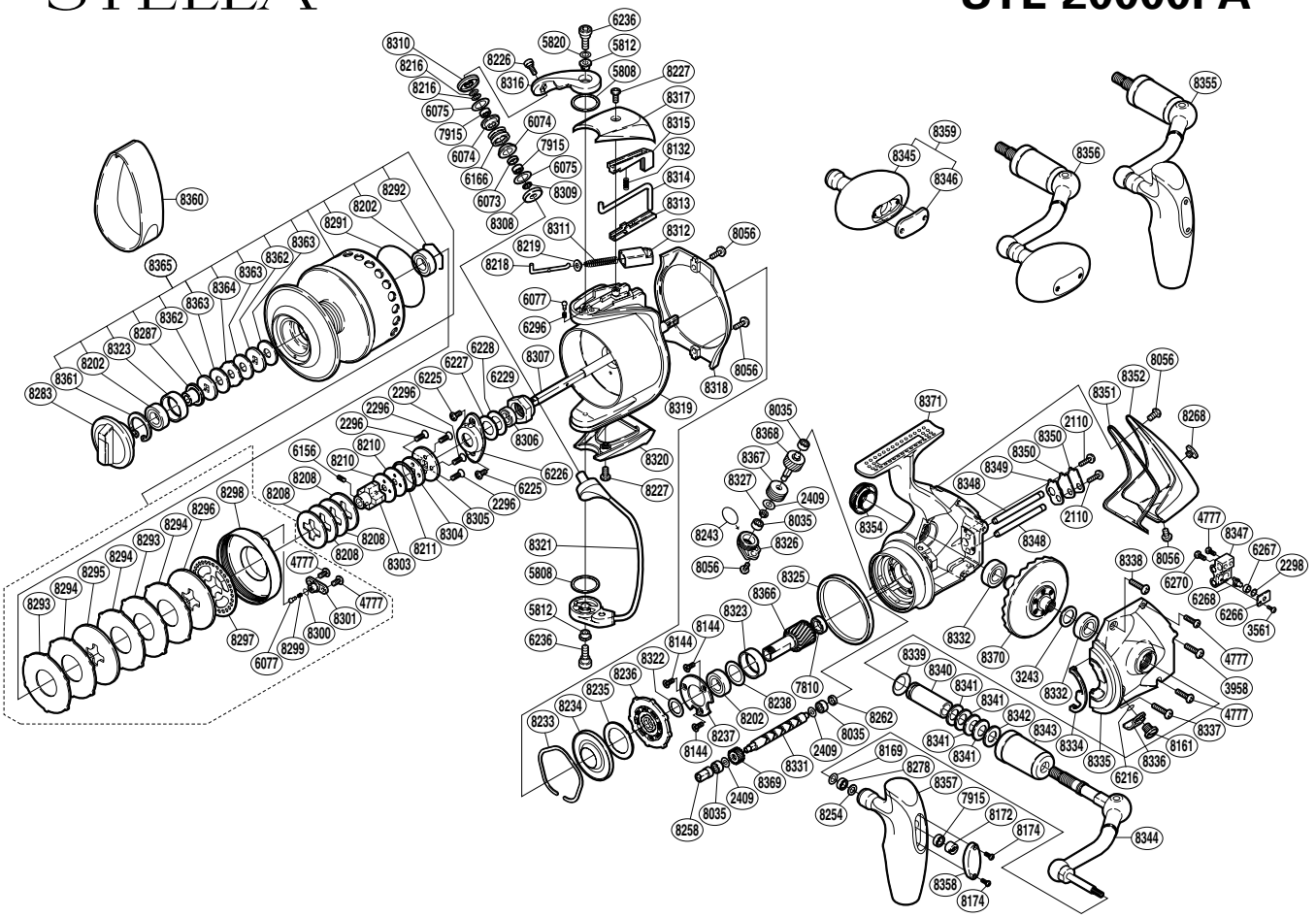

Part No.	Description	Part No.	Description	Part No.	Description
RD2110	Worm Shaft Retainer Screw	RD8226	Line Roller Screw	RD8322	Adjusting Washer
RD2296	Support Lock Screw	RD8227	Protector Screw	RD8323	Bearing Housing
RD2298	Spacer	RD8233	Roller Clutch Water Proof Retainer	RD8325	Friction Ring
RD2409	Worm Shaft Spacer	RD8234	Roller Clutch Water Proof	RD8326	Gear Cover
RD3243	Drive Gear Washer	RD8235	Roller Clutch Reinforce	RD8327	Idle Gear (B) Collar
RD3561	Oscillating Pawl Cover Screw	RD8236	Roller Clutch Assembly	RD8331	Worm Shaft
RD3958	Side Cover Screw (D)	RD8237	Bearing Retainer	RD8332	Ball Bearing
RD4777	Multi-Purpose Screw	RD8238	Adjusting Washer	RD8334	Flange Water Proof
RD5808	Bail Arm Washer	RD8243	Gear Cover Seal	RD8335	Side Cover
RD5812	Bail Arm Screw Collar	RD8254	Handle Knob Adjust Washer	RD8336	Oil Shield Cover
RD5820	Spacer	RD8258	Worm Bushing	RD8337	Side Cover Screw (B)
RD6073	Bearing Spacer	RD8262	Worm Shaft Ring	RD8338	Side Cover Screw (A)
RD6074	Line Roller Bushing	RD8268	Oil Cap	RD8339	Handle Shaft Seal
RD6075	Roller Bearing Seal	RD8278	Ball Bearing	RD8340	Handle Shaft Cover (A)
RD6077	Click Pin	RD8283	Drag Knob	RD8341	Disc Spring
RD6156	Set Screw	RD8287	Bearing Support	RD8342	Small Handle Shank Washer
RD6166	Line Roller	RD8291	“O” Ring	RD8343	Handle Shaft Cover (B)
RD6216	“O” Ring	RD8292	Bearing Retainer	RD8344	Handle Shank Assembly
RD6225	Nut Lock Screw	RD8293	Eared Washer (B)	RD8347	Oscillating Slider
RD6226	Rotor Nut Lock Plate	RD8294	Drag Washer (B)	RD8348	Oscillating Guide
RD6227	Bearing Washer	RD8295	Spool Drag Disc (A)	RD8349	Worm Shaft Retainer Washer
RD6228	Bearing Water Proof	RD8296	Spool Drag Disc (B)	RD8350	Worm Shaft Retainer
RD6229	Rotor Nut	RD8297	Drag Click Holder Cover	RD8351	Rear Shield
RD6236	Bail Arm Screw	RD8298	Drag Cover	RD8352	Rear Protector
RD6266	Oscillating Pawl Cover	RD8299	Click Spring	RD8354	Handle Screw Cap
RD6267	Oscillating Slider Bushing	RD8300	“O” Ring	RD8357	Handle Knob (T type B)
RD6268	Oscillating Pawl	RD8301	Drag Click Holder	RD8358	Handle Knob I.D. Plate
RD6270	Slider Retainer Screw	RD8303	Bearing Bushing	RD8361	“C” Lock
RD6296	Click Spring	RD8304	Spool Support (A)	RD8362	Key Washer
RD7810	Ball Bearing	RD8305	Spool Support (B)	RD8363	Drag Washer (A)
RD7915	Ball Bearing	RD8306	Ball Bearing	RD8364	Eared Washer (A)
RD8035	Ball Bearing	RD8307	Main Shaft	RD8365	Spool Assembly
RD8056	Multi-Purpose Screw	RD8308	Line Roller Support Collar	RD8366	Pinion Gear
RD8132	Bail Trip Cover Spring	RD8309	Bearing Retainer Ring	RD8367	Idle Gear (B)
RD8144	Bearing Retainer Screw	RD8310	Line Roller Washer	RD8368	Pinion Worm Gear
RD8161	Oil Cap	RD8311	Bail Spring	RD8369	Idle Gear
RD8169	Handle Knob Adjust Washer	RD8312	Bail Spring Seat	RD8370	Drive Gear
RD8172	Handle Knob Nut	RD8313	Trip Lever Guide	RD8371	Body
RD8174	Handle Knob Screw	RD8314	Bail Trip Lever		
RD8202	Ball Bearing	RD8315	Bail Trip Cover	RD8355	Handle Assembly (T type B 10000)
RD8208	Spool Washer	RD8316	Bail Arm	RD8356	Handle Assembly (Round type C 20000)
RD8210	Spool Support (C)	RD8317	Bail Spring Cover	RD8359	Handle Knob Assembly (Round type C)
RD8211	Bearing Water Proof	RD8318	Rotor Guard		
RD8216	Adjusting Washer	RD8319	Rotor	RD8345	Spare Handle Knob (Round type C)
RD8218	Bail Spring Guide (A)	RD8320	Bail Hold Support Guard	RD8346	Spare Handle Knob I.D. Plate
RD8219	Spring Guide (A) Support	RD8321	Bail Assembly	RD8360	Line Band (LLL)

(141001)