SHIMANO®

STELLA A-RB

STL-3000FB

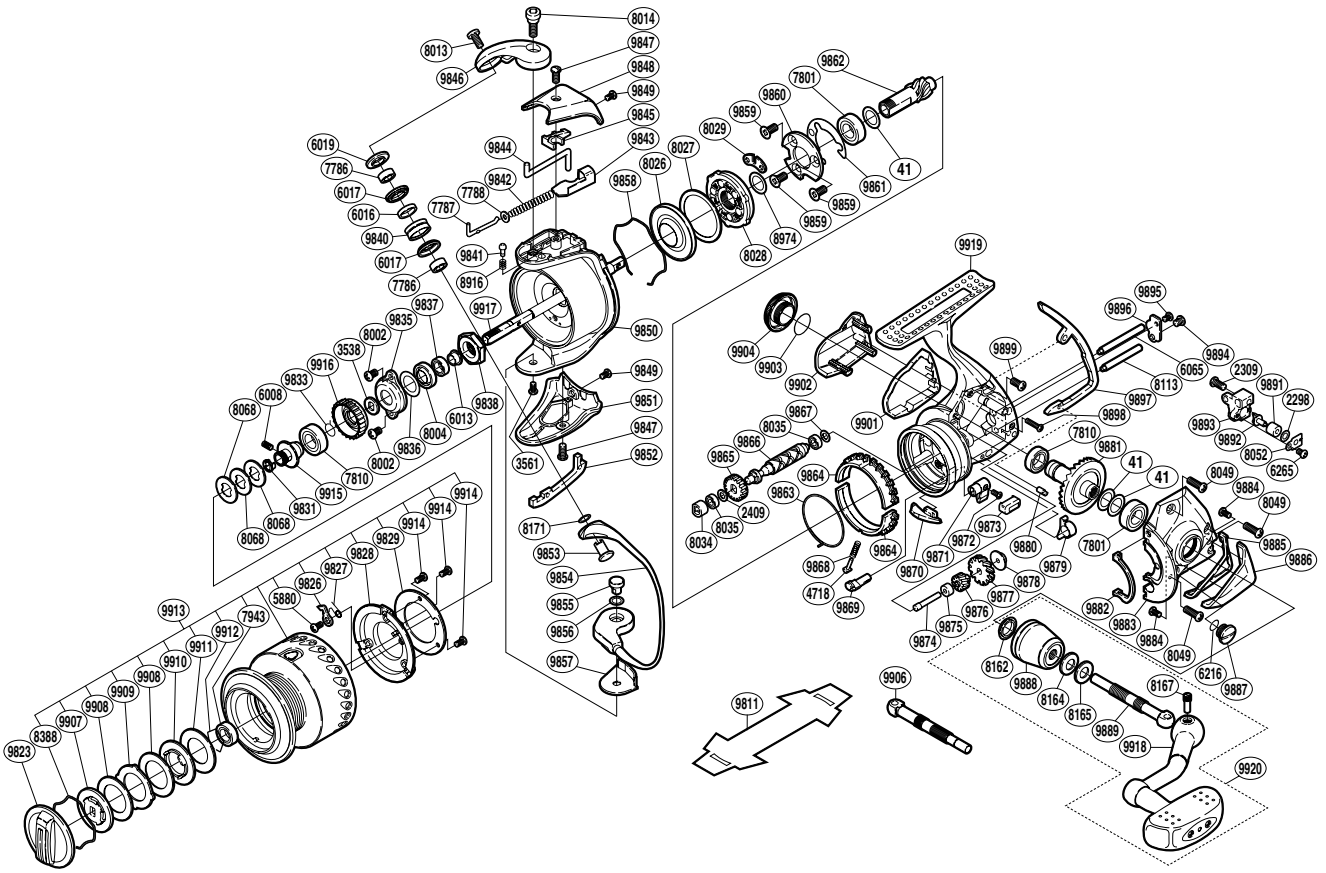

(1SE693002U)

Part No.	Description	Part No.	Description	Part No.	Description
RD 0041	Washer	RD 9826	Drag Click	RD 9875	Idle Gear B Shaft Bushing
RD 2298	Spacer	RD 9827	Drag Click Spring	RD 9876	Idle Gear B (small)
RD 2309	Screw	RD 9828	Spool Pin Cover	RD 9877	Idle Gear B (large)
RD 2409	Spacer	RD 9829	Spool Pin Cover Plate	RD 9878	Idle Gear B Shaft Bushing B
RD 3538	Spool Support	RD 9831	Bearing Bushing Spacer	RD 9879	Bushing
RD 3561	Screw	RD 9833	Ratchet Spring	RD 9880	Rear Protector B Pin
RD 4718	Lever Spring Guide A	RD 9835	Rotor Nut Lock Plate	RD 9881	Drive Gear
RD 5880	Screw	RD 9836	Washer	RD 9882	Flange Water Proof
RD 6008	Set Screw	RD 9837	Ball Bearing	RD 9883	Side Cover
RD 6013	Main Shaft Spacer	RD 9838	Rotor Nut	RD 9884	Screw
RD 6016	Bearing Spacer	RD 9840	Line Roller	RD 9885	Cover (for side cover)
RD 6017	Line Roller Bushing	RD 9841	Click Pin	RD 9886	Side Cover Guard
RD 6019	Line Roller Washer	RD 9842	Bail Spring	RD 9887	Oil Cap
RD 6065	Oscillating Guide A	RD 9843	Bail Spring Seat	RD 9888	Handle Shaft Cover
RD 6216	O Ring	RD 9844	Bail Trip Lever	RD 9889	Handle Shaft (left)
RD 6265	Screw	RD 9845	Bail Trip Cover	RD 9891	Oscillating Slider Bushing
RD 7786	Ball Bearing	RD 9846	Bail Arm	RD 9892	Oscillating Pawl
RD 7787	Bail Spring Guide A	RD 9847	Screw	RD 9893	Oscillating Slider
RD 7788	Spring Guide A Support	RD 9848	Bail Spring Cover	RD 9894	Screw
RD 7801	Ball Bearing	RD 9849	Screw	RD 9895	Screw
RD 7810	Ball Bearing	RD 9850	Rotor	RD 9896	Worm Shaft Retainer
RD 7943	Ball Bearing	RD 9851	Rotor Side Cover	RD 9897	Rear Protector B
RD 8002	Screw	RD 9852	Rotor Side Cover Guard	RD 9898	Screw
RD 8004	Bearing Water Proof	RD 9853	Line Roller Support	RD 9899	Screw
RD 8013	Screw	RD 9854	Bail Assembly	RD 9901	Rear Shield
RD 8014	Screw	RD 9855	Bail Hold Support Shaft	RD 9902	Rear Protector A
RD 8026	Roller Clutch Water Proof	RD 9856	Washer	RD 9903	O Ring
RD 8027	Roller Clutch Outer Spacer	RD 9857	Bail Hold Support Spacer	RD 9904	Handle Screw Cap
RD 8028	Roller Clutch Assembly	RD 9858	Roller Clutch Water Proof Retainer	RD 9907	Key Washer B
RD 8029	Clutch Insole	RD 9859	Screw	RD 9908	Drag Washer A
RD 8034	Worm Bushing	RD 9860	Bearing Retainer	RD 9909	Eared Washer
RD 8035	Ball Bearing	RD 9861	Bearing Retainer Sheet	RD 9910	Key Washer
RD 8049	Screw	RD 9862	Pinion Gear	RD 9911	Drag Washer B
RD 8052	Oscillating Pawl Cover	RD 9863	Friction Spring	RD 9912	Bearing Retainer
RD 8068	Spool Washer	RD 9864	Friction Ring	RD 9913	Spool Assembly
RD 8113	Oscillating Guide	RD 9865	Idle Gear	RD 9914	Screw
RD 8162	Handle Shaft Seal	RD 9866	Worm Shaft	RD 9915	Bearing Bushing
RD 8164	Coned Disc Spring	RD 9867	Washer	RD 9916	Drag Click Ratchet
RD 8165	Large Handle Shank Washer	RD 9868	Anti-Reverse Cam Spring	RD 9917	Main Shaft
RD 8167	Handle Shaft Screw	RD 9869	Anti-Reverse Cam	RD 9918	Handle
RD 8171	Washer	RD 9870	Bail Trip Strike	RD 9919	Body
RD 8388	Drag Washers Retainer	RD 9871	Anti-Reverse Lever	RD 9920	Handle Assembly
RD 8916	Click Spring	RD 9872	Screw		
RD 8974	Washer	RD 9873	Anti-Reverse Lever Cover	RD 9811	Reel Seat Spacer
RD 9823	Drag Knob	RD 9874	Idle Gear B Shaft	RD 9906	Handle Shaft (right)

(170124)