# SHIMANO

## STELLA S A-RB

## STL-3000FD

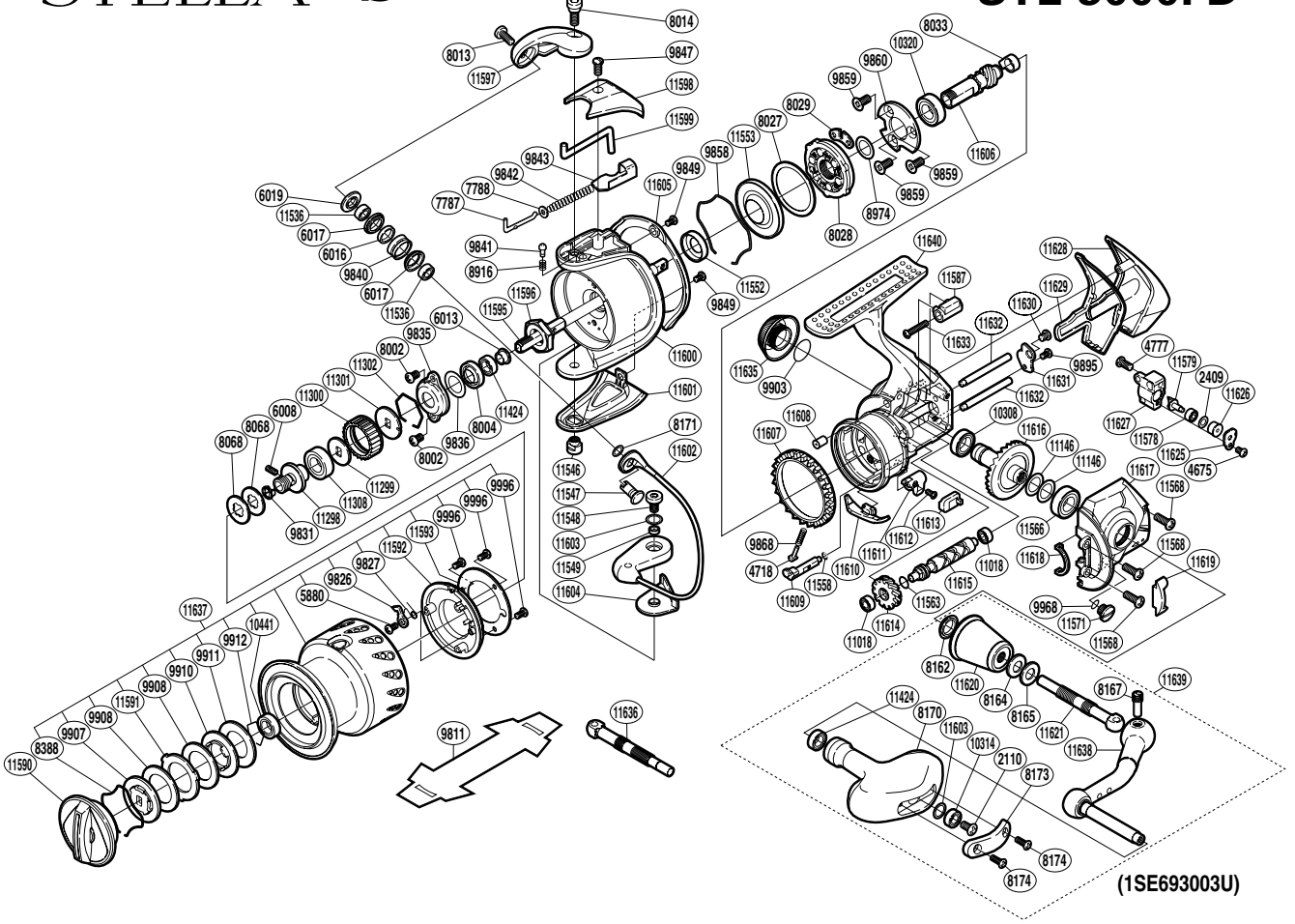


| Part No. | Description | Part No. | Description | Part No. | Description |
|---|---|---|---|---|---|
| RD 2110 | Screw | RD 9858 | Roller Clutch Water Proof Retainer | RD11595 | Main Shaft |
| RD 2409 | Spacer | RD 9859 | Screw | RD11596 | Rotor Nut |
| RD 4675 | Screw | RD 9860 | Bearing Retainer | RD11597 | Bail Arm |
| RD 4718 | Lever Spring Guide A | RD 9868 | Anti-Reverse Cam Spring | RD11598 | Bail Spring Cover |
| RD 4777 | Screw | RD 9895 | Screw | RD11599 | Bail Trip Lever |
| RD 5880 | Screw | RD 9903 | O Ring | RD11600 | Rotor |
| RD 6008 | Set Screw | RD 9907 | Key Washer | RD11601 | Bail Hold Support Guard |
| RD 6013 | Main Shaft Spacer | RD 9908 | Drag Washer | RD11602 | Bail Assembly |
| RD 6016 | Bearing Spacer | RD 9910 | Key Washer | RD11603 | Washer |
| RD 6017 | Line Roller Bushing | RD 9911 | Drag Washer | RD11604 | Bail Hold Support Spacer |
| RD 6019 | Line Roller Plate | RD 9912 | Bearing Retainer | RD11605 | Rotor Guard |
| RD 7787 | Bail Spring Guide A | RD 9968 | O Ring | RD11606 | Pinion Gear |
| RD 7788 | Spring Guide A Support | RD 9996 | Screw | RD11607 | Friction Ring |
| RD 8002 | Screw | RD10308 | Ball Bearing | RD11608 | Body Flange Seal |
| RD 8004 | Bearing Water Proof | RD10314 | Ball Bearing | RD11609 | Anti-Reverse Cam |
| RD 8013 | Screw | RD10320 | Ball Bearing | RD11610 | Bail Trip Strike |
| RD 8014 | Screw | RD10441 | Ball Bearing | RD11611 | Anti-Reverse Lever |
| RD 8027 | Roller Clutch Outer Spacer | RD11018 | Ball Bearing | RD11612 | Screw |
| RD 8028 | Roller Clutch Assembly | RD11146 | Washer | RD11613 | Anti-Reverse Lever Cover |
| RD 8029 | Clutch Insole | RD11298 | Bearing Bushing | RD11614 | Idle Gear |
| RD 8033 | Bushing | RD11299 | Washer | RD11615 | Worm Shaft |
| RD 8068 | Spool Washer | RD11300 | Drag Click Ratchet | RD11616 | Drive Gear |
| RD 8162 | Handle Shaft Seal | RD11301 | Spool Support | RD11617 | Side Cover |
| RD 8164 | Coned Disc Spring | RD11302 | Ratchet Spring | RD11618 | Flange Water Proof |
| RD 8165 | Large Handle Shank Washer | RD11424 | Ball Bearing | RD11619 | Friction Ring Spacer |
| RD 8167 | Handle Shaft Screw | RD11536 | Ball Bearing | RD11620 | Handle Shaft Cover |
| RD 8170 | Handle Knob | RD11546 | Bail Hold Support Shaft | RD11621 | Handle Shaft (left) |
| RD 8171 | Washer | RD11547 | Line Roller Support | RD11625 | Oscillating Pawl Cover |
| RD 8173 | Handle Knob I.D. Plate | RD11548 | Screw | RD11626 | Oscillating Slider Bushing |
| RD 8174 | Screw | RD11549 | Screw Collar | RD11627 | Oscillating Slider |
| RD 8388 | Drag Washers Retainer | RD11552 | Rotor Ring | RD11628 | Rear Protector |
| RD 8916 | Click Spring | RD11553 | Roller Clutch Water Proof | RD11629 | Rear Shield |
| RD 8974 | Washer | RD11558 | O Ring | RD11630 | Screw |
| RD 9826 | Drag Click | RD11563 | Worm Shaft Ring | RD11631 | Worm Shaft Retainer |
| RD 9827 | Drag Click Spring | RD11566 | Ball Bearing | RD11632 | Oscillating Guide |
| RD 9831 | Bearing Bushing Spacer | RD11568 | Screw | RD11633 | Screw |
| RD 9835 | Rotor Nut Lock Plate | RD11571 | Oil Cap | RD11635 | Handle Screw Cap |
| RD 9836 | Washer | RD11578 | Ball Bearing | RD11637 | Spool Assembly |
| RD 9840 | Line Roller | RD11579 | Oscillating Pawl | RD11638 | Handle Shank Assembly |
| RD 9841 | Click Pin | RD11587 | Rear Protector Collar | RD11639 | Handle Assembly |
| RD 9842 | Bail Spring | RD11590 | Drag Knob | RD11640 | Body |
| RD 9843 | Bail Spring Seat | RD11591 | Eared Washer | | |
| RD 9847 | Screw | RD11592 | Spool Pin Cover | RD 9811 | Reel Seat Spacer (accessory) |
| RD 9849 | Screw | RD11593 | Spool Pin Cover Plate | RD11636 | Handle Shaft (right) (accessory) |