SHIMANO

STELLA SA-RB

STL-4000FE

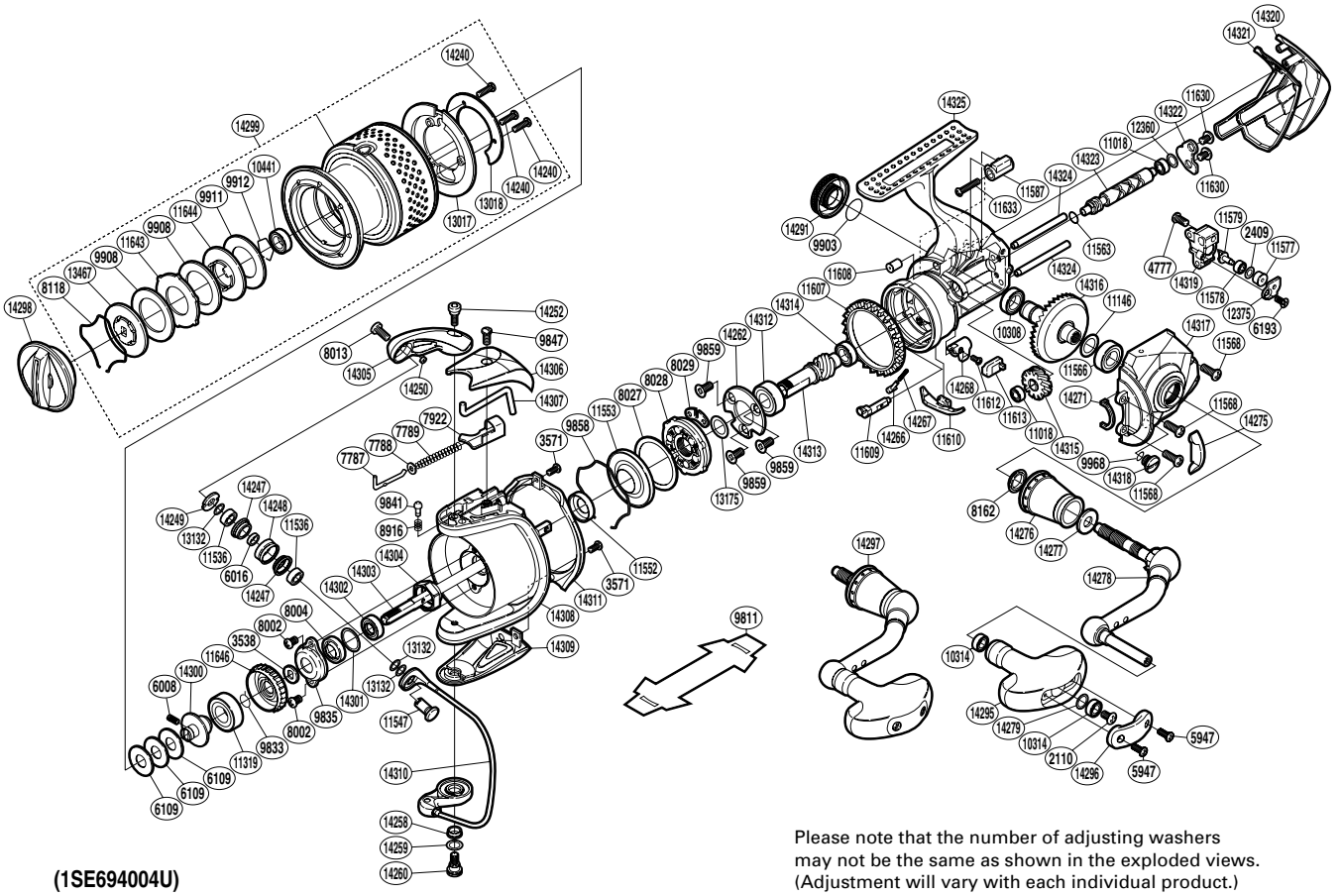

(1SE694004U)

Please note that the number of adjusting washers may not be the same as shown in the exploded views. (Adjustment will vary with each individual product.)

Part No.	Description	Part No.	Description	Part No.	Description
RD 2110	Screw	RD11547	Line Roller Support	RD14271	Flange Water Proof
RD 2409	Spacer	RD11552	Rotor Ring	RD14275	Friction Ring Spacer
RD 3538	Spool Support	RD11553	Roller Clutch Water Proof	RD14276	Handle Shaft Cover
RD 3571	Screw	RD11563	Worm Shaft Ring	RD14277	Large Handle Shank Washer
RD 4777	Screw	RD11566	Ball Bearing	RD14278	Handle Shank Assembly
RD 5947	Screw	RD11568	Screw	RD14279	Washer
RD 6008	Set Screw	RD11577	Oscillating Slider Bushing	RD14291	Handle Screw Cap
RD 6016	Bearing Spacer	RD11578	Ball Bearing	RD14295	Handle Knob
RD 6109	Spool Washer	RD11579	Oscillating Pawl	RD14296	Handle Knob I.D. Plate
RD 6193	Screw	RD11587	Rear Protector Collar	RD14297	Handle Assembly
RD 7787	Bail Spring Guide A	RD11607	Friction Ring	RD14298	Drag Knob
RD 7788	Spring Guide A Support	RD11608	Body Flange Seal	RD14299	Spool Assembly
RD 7789	Bail Spring	RD11609	Anti-Reverse Cam	RD14300	Bearing Bushing
RD 7922	Bail Spring Seat	RD11610	Bail Trip Strike	RD14301	Washer
RD 8002	Screw	RD11612	Screw	RD14302	Main Shaft Spacer
RD 8004	Bearing Water Proof	RD11613	Anti-Reverse Lever Cover	RD14303	Main Shaft
RD 8013	Screw	RD11630	Screw	RD14304	Rotor Nut
RD 8027	Roller Clutch Outer Spacer	RD11633	Screw	RD14305	Bail Arm
RD 8028	Roller Clutch Assembly	RD11643	Eared Washer	RD14306	Bail Spring Cover
RD 8029	Clutch Insole	RD11644	Key Washer	RD14307	Bail Trip Lever
RD 8118	Drag Washers Retainer	RD11646	Drag Click Ratchet	RD14308	Rotor
RD 8162	Handle Shaft Seal	RD12360	Washer	RD14309	Bail Hold Support Guard
RD 8916	Click Spring	RD12375	Oscillating Pawl Cover	RD14310	Bail Assembly
RD 9833	Ratchet Spring	RD13017	Spool Pin Cover	RD14311	Rotor Guard
RD 9835	Rotor Nut Lock Plate	RD13018	Spool Pin Cover Plate	RD14312	Ball Bearing
RD 9841	Click Pin	RD13132	Washer	RD14313	Pinion Gear
RD 9847	Screw	RD13175	Washer	RD14314	Ball Bearing
RD 9858	Roller Clutch Water Proof Retainer	RD13467	Key Washer	RD14315	Idle Gear
RD 9859	Screw	RD14240	Screw	RD14316	Drive Gear
RD 9903	O Ring	RD14247	Line Roller Bushing	RD14317	Side Cover
RD 9908	Drag Washer	RD14248	Line Roller	RD14318	Oil Cap
RD 9911	Drag Washer	RD14249	Line Roller Plate	RD14319	Oscillating Slider
RD 9912	Bearing Retainer	RD14250	Line Roller Oil Cap	RD14320	Rear Protector
RD 9968	O Ring	RD14252	Screw	RD14321	Rear Shield
RD10308	Ball Bearing	RD14258	Bail Trip Cam Bushing	RD14322	Worm Shaft Retainer
RD10314	Ball Bearing	RD14259	Washer	RD14323	Worm Shaft
RD10441	Ball Bearing	RD14260	Screw	RD14324	Oscillating Guide
RD11018	Ball Bearing	RD14262	Bearing Retainer	RD14325	Body
RD11146	Washer	RD14266	Spring Guide		
RD11319	Ball Bearing	RD14267	Anti-Reverse Cam Spring		
RD11536	Ball Bearing	RD14268	Anti-Reverse Lever	RD 9811	Reel Seat Spacer (accessory)