SHIMANO

STRADIC CI4+ SA-RB

STCI4+3000FA

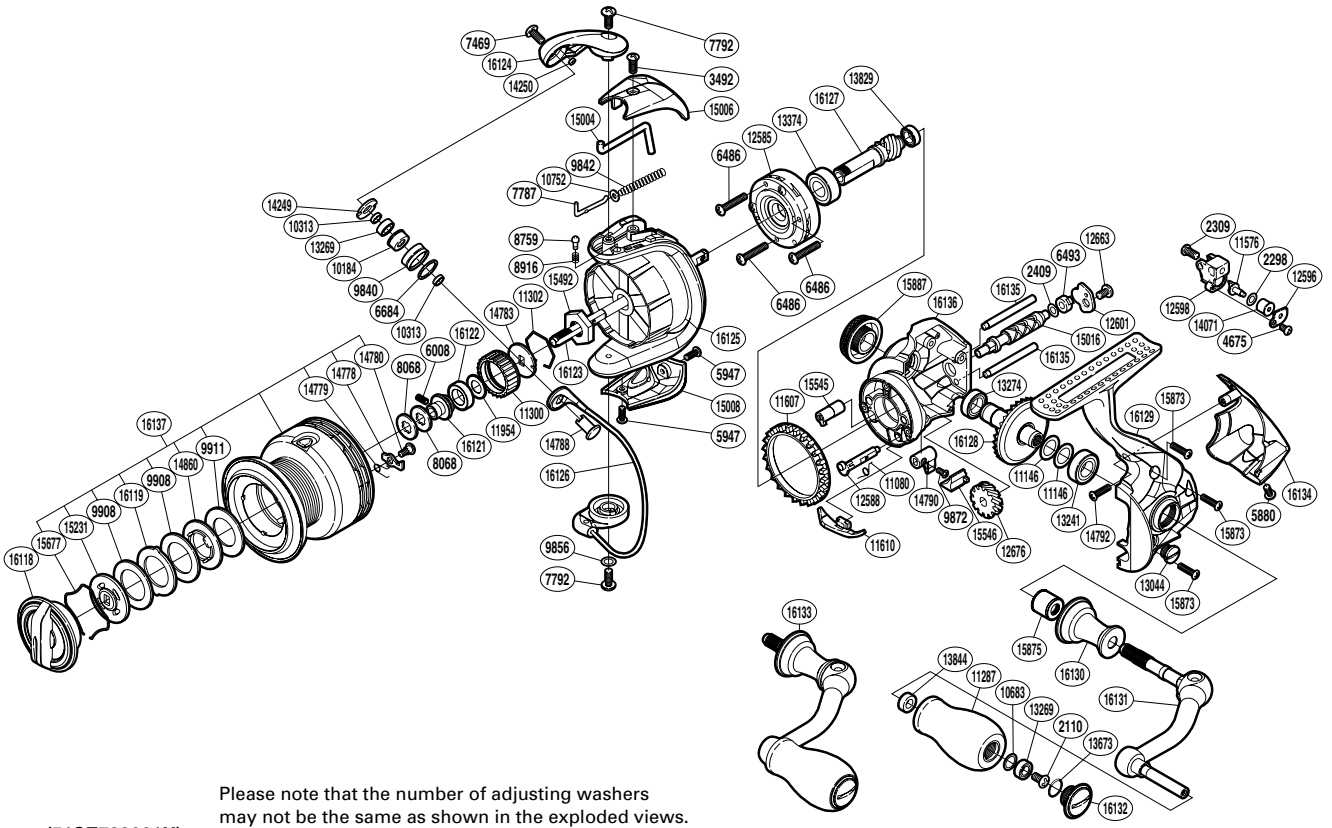

(51SE793001U)

Please note that the number of adjusting washers may not be the same as shown in the exploded views. (Adjustment will vary with each individual product.)

Part No.	Description	Part No.	Description	Part No.	Description
RD 2110	Screw	RD11302	Ratchet Spring	RD15006	Bail Spring Cover
RD 2298	Spacer	RD11579	Oscillating Pawl	RD15008	Bail Hold Support Guard
RD 2309	Screw	RD11607	Friction Ring	RD15016	Worm Shaft
RD 2409	Spacer	RD11610	Bail Trip Strike	RD15231	Key Washer
RD 3492	Screw	RD11954	Washer	RD15492	Rotor Nut
RD 4675	Screw	RD12585	Roller Clutch Assembly	RD15545	Worm Bushing (front)
RD 5880	Screw	RD12588	Anti-Reverse Cam	RD15546	Anti-Reverse Lever Cover
RD 5947	Screw	RD12596	Oscillating Pawl Cover	RD15677	Drag Washers Retainer
RD 6008	Set Screw	RD12598	Oscillating Slider	RD15873	Screw
RD 6486	Screw	RD12601	Worm Shaft Retainer	RD15875	Handle Shaft Cover B
RD 6493	Worm Bushing (rear)	RD12663	Screw	RD15887	Handle Screw Cap
RD 6684	Line Roller Spacer	RD12676	Idle Gear	RD16118	Drag Knob
RD 7469	Screw	RD13044	Oil Cap	RD16119	Eared Washer
RD 7787	Bail Spring Guide A	RD13241	Ball Bearing	RD16121	Bearing Bushing
RD 7792	Screw	RD13269	Ball Bearing	RD16122	Spool Bushing
RD 8068	Spool Washer	RD13274	Ball Bearing	RD16123	Main Shaft
RD 8759	Click Pin	RD13374	Ball Bearing	RD16124	Bail Arm
RD 8916	Click Spring	RD13673	O Ring	RD16125	Rotor
RD 9840	Line Roller	RD13829	Ball Bearing	RD16126	Bail Assembly
RD 9842	Bail Spring	RD13844	Handle Knob Bushing	RD16127	Pinion Gear
RD 9856	Washer	RD14071	Oscillating Slider Bushing	RD16128	Drive Gear
RD 9872	Screw	RD14249	Line Roller Plate	RD16129	Side Cover
RD 9908	Drag Washer	RD14250	Line Roller Oil Cap	RD16130	Handle Shaft Cover
RD 9911	Drag Washer	RD14778	Drag Click	RD16131	Handle Shank Assembly
RD10184	Line Roller Bushing	RD14779	Drag Click Spring	RD16132	Handle Knob Seal
RD10313	Bearing Spacer	RD14780	Screw	RD16133	Handle Assembly
RD10683	Washer	RD14783	Spool Support	RD16134	Rear Protector
RD10752	Bail Spring Guide A Support	RD14788	Line Roller Support	RD16135	Oscillating Guide
RD11080	Anti-Reverse Cam Spring	RD14790	Anti-Reverse Lever	RD16136	Body
RD11146	Washer	RD14792	Screw	RD16137	Spool Assembly
RD11287	Handle Knob	RD14860	Key Washer		
RD11300	Drag Click Ratchet	RD15004	Bail Trip Lever		