SHIMANO

SUSTAIN SA-RB

SA-2500FG

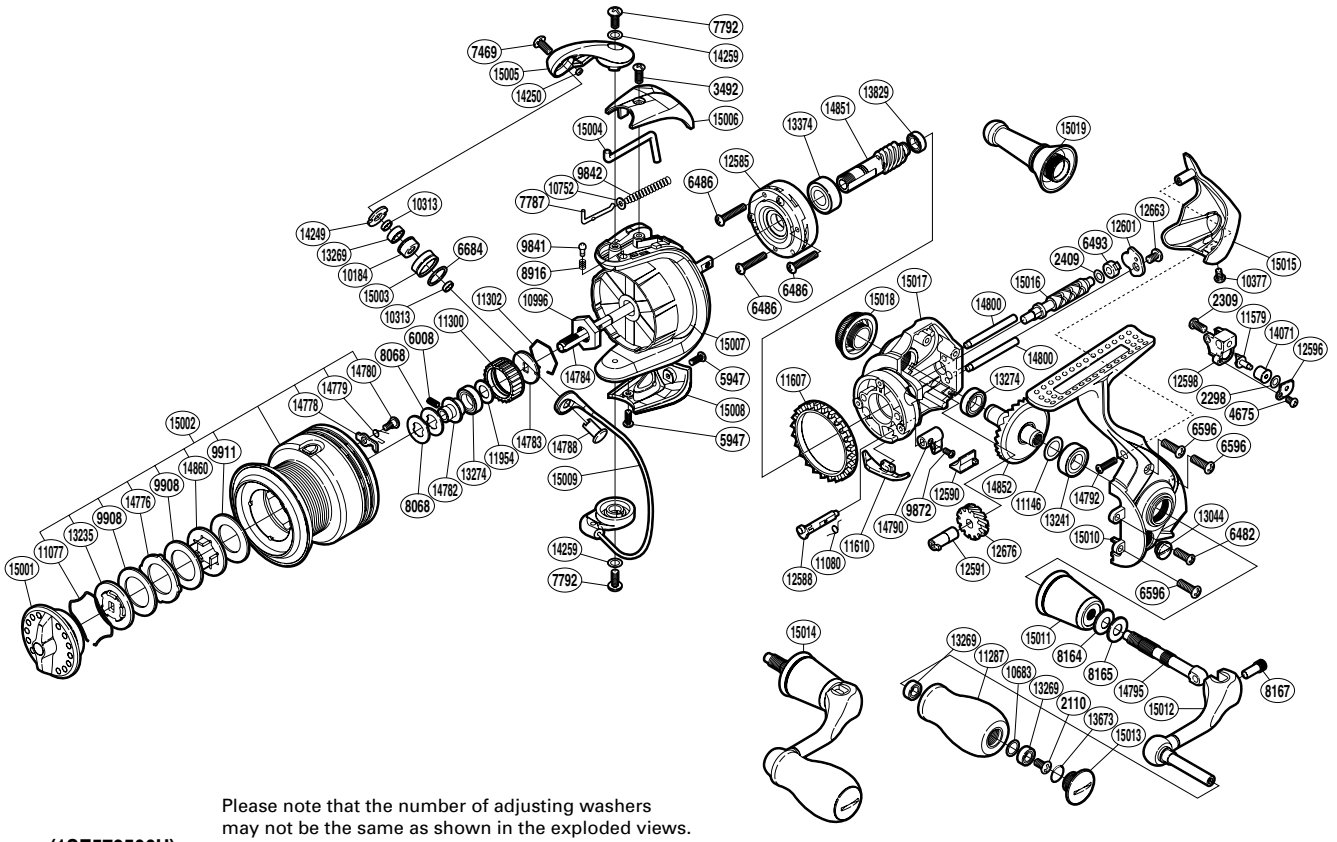

Please note that the number of adjusting washers may not be the same as shown in the exploded views. (Adjustment will vary with each individual product.)

(1SE572506U)

Part No.	Description	Part No.	Description	Part No.	Description
RD 2110	Screw	RD11080	Anti-Reverse Cam Spring	RD14780	Screw
RD 2298	Spacer	RD11146	Washer	RD14782	Bearing Bushing
RD 2309	Screw	RD11287	Handle Knob	RD14783	Spool Support
RD 2409	Spacer	RD11300	Drag Click Ratchet	RD14784	Main Shaft
RD 3492	Screw	RD11302	Ratchet Spring	RD14788	Line Roller Support
RD 4675	Screw	RD11579	Oscillating Pawl	RD14790	Anti-Reverse Lever
RD 5947	Screw	RD11607	Friction Ring	RD14792	Screw
RD 6008	Set Screw	RD11610	Bail Trip Strike	RD14795	Handle Shaft
RD 6482	Screw	RD11954	Washer	RD14800	Oscillating Guide
RD 6486	Screw	RD12585	Roller Clutch Assembly	RD14851	Pinion Gear
RD 6493	Worm Bushing (rear)	RD12588	Anti-Reverse Cam	RD14852	Drive Gear
RD 6596	Screw	RD12590	Anti-Reverse Lever Cover	RD14860	Key Washer
RD 6684	Line Roller Spacer	RD12591	Worm Bushing (front)	RD15001	Drag Knob
RD 7469	Screw	RD12596	Oscillating Pawl Cover	RD15002	Spool Assembly
RD 7787	Bail Spring Guide A	RD12598	Oscillating Slider	RD15003	Line Roller
RD 7792	Screw	RD12601	Worm Shaft Retainer	RD15004	Bail Trip Lever
RD 8068	Spool Washer	RD12663	Screw	RD15005	Bail Arm
RD 8164	Coned Disc Spring	RD12676	Idle Gear	RD15006	Bail Spring Cover
RD 8165	Large Handle Shank Washer	RD13044	Oil Cap	RD15007	Rotor
RD 8167	Handle Shaft Screw	RD13235	Key Washer	RD15008	Bail Hold Support Guard
RD 8916	Click Spring	RD13241	Ball Bearing	RD15009	Bail Assembly
RD 9841	Click Pin	RD13269	Ball Bearing	RD15010	Side Cover
RD 9842	Bail Spring	RD13274	Ball Bearing	RD15011	Handle Shaft Cover
RD 9872	Screw	RD13374	Ball Bearing	RD15012	Handle Shank Assembly
RD 9908	Drag Washer	RD13673	O Ring	RD15013	Handle Knob Seal
RD 9911	Drag Washer	RD13829	Ball Bearing	RD15014	Handle Assembly
RD10184	Line Roller Bushing	RD14071	Oscillating Slider Bushing	RD15015	Rear Protector
RD10313	Bearing Spacer	RD14249	Line Roller Plate	RD15016	Worm Shaft
RD10377	Screw	RD14250	Line Roller Oil Cap	RD15017	Body
RD10683	Washer	RD14259	Washer	RD15018	Handle Screw Cap
RD10752	Bail Spring Guide A Support	RD14776	Eared Washer		
RD10996	Rotor Nut	RD14778	Drag Click		
RD11077	Drag Washers Retainer	RD14779	Drag Click Spring	RD15019	Reel Stand (accessory)