SHIMANO

SUSTAIN SA-RB

SA-6000FE

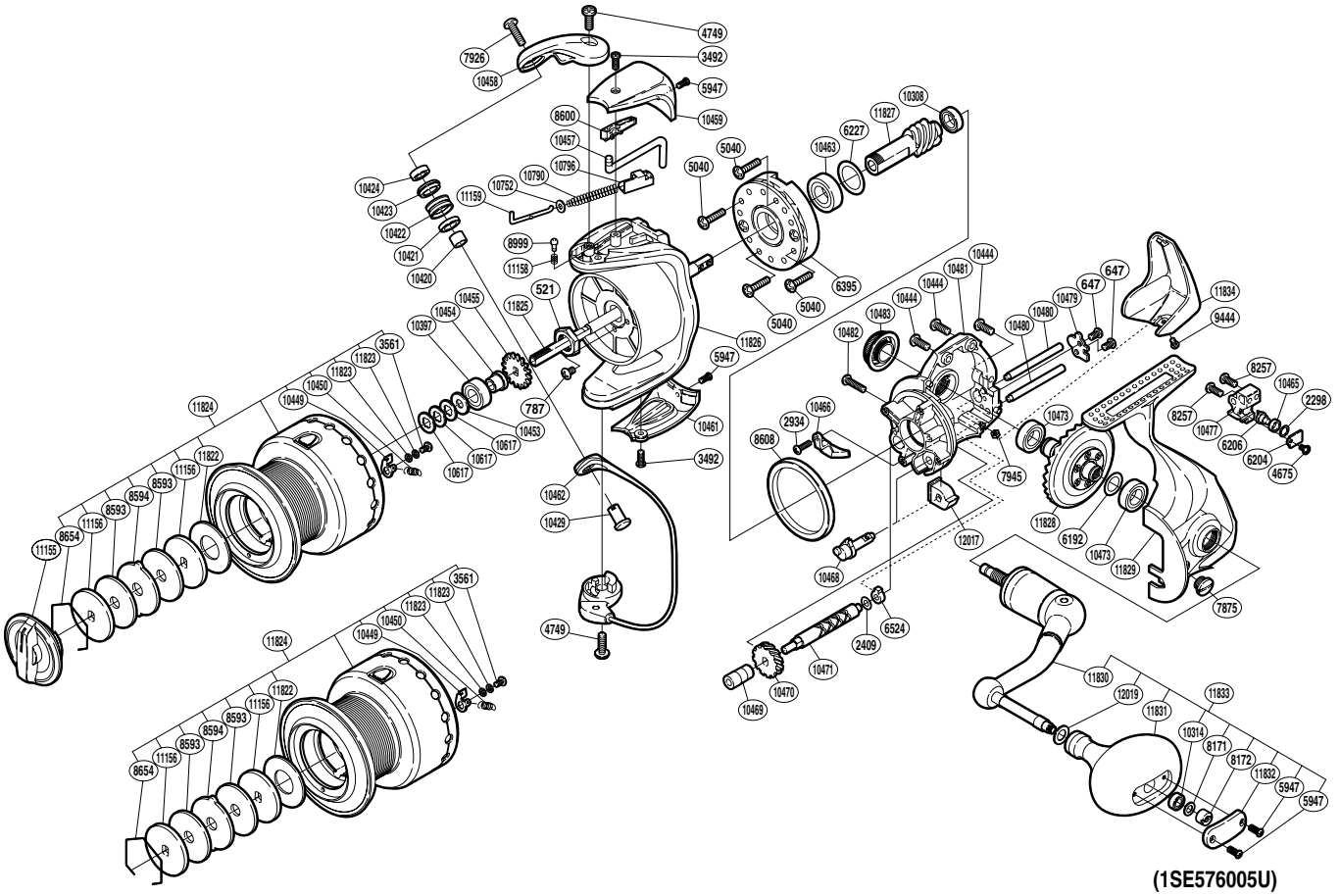

(1SE576005U)

Part No.	Description	Part No.	Description	Part No.	Description
RD 0521	Rotor Nut	RD 9444	Screw	RD10479	Worm Shaft Retainer
RD 0647	Screw	RD10308	Ball Bearing	RD10480	Oscillating Guide
RD 0787	Screw	RD10314	Ball Bearing	RD10481	Body
RD 2298	Spacer	RD10397	Ball Bearing	RD10482	Screw
RD 2409	Spacer	RD10420	Bearing Spacer	RD10483	Handle Screw Cap
RD 2934	Screw	RD10421	Line Roller Collar	RD10617	Spool Washer
RD 3492	Screw	RD10422	Line Roller	RD10752	Spring Guide A Support
RD 3561	Screw	RD10423	Line Roller Bushing	RD10790	Bail Spring
RD 4675	Screw	RD10424	Ball Bearing	RD10796	Bail Spring Seat
RD 4749	Screw	RD10429	Line Roller Support	RD11155	Drag Knob
RD 5040	Screw	RD10444	Screw	RD11156	Key Washer
RD 5947	Screw	RD10449	Drag Click	RD11158	Click Spring
RD 6192	Washer	RD10450	Click Spring	RD11159	Bail Spring Guide A
RD 6204	Oscillating Pawl Cover	RD10453	Spool Support B	RD11822	Drag Washer
RD 6206	Oscillating Pawl	RD10454	Bearing Bushing	RD11823	Drag Click Collar
RD 6227	Washer	RD10455	Spool Support	RD11824	Spool Assembly
RD 6395	Roller Clutch Assembly	RD10457	Bail Trip Lever	RD11825	Main Shaft
RD 6524	Worm Bushing (rear)	RD10458	Bail Arm	RD11826	Rotor
RD 7875	Oil Cap	RD10459	Bail Spring Cover	RD11827	Pinion Gear
RD 7926	Screw	RD10461	Rotor Side Cover	RD11828	Drive Gear
RD 7945	Nut	RD10462	Bail Assembly	RD11829	Side Cover
RD 8171	Washer	RD10463	Ball Bearing	RD11830	Handle Shank Assembly
RD 8172	Handle Knob Nut	RD10465	Oscillating Slider Bushing	RD11831	Handle Knob
RD 8257	Screw	RD10466	Bail Trip Strike	RD11832	Handle Knob I.D. Plate
RD 8593	Drag Washer	RD10468	Anti-Reverse Cam	RD11833	Handle Assembly
RD 8594	Eared Washer	RD10469	Worm Bushing (front)	RD11834	Rear Protector
RD 8600	Bail Trip Cover	RD10470	Idle Gear	RD12017	Anti-Reverse Lever Cover
RD 8608	Friction Ring	RD10471	Worm Shaft	RD12019	Washer
RD 8654	Drag Washers Retainer	RD10473	Ball Bearing		
RD 8999	Click Pin	RD10477	Oscillating Slider		