SHIMANO

SYMETRE SY-1000FL

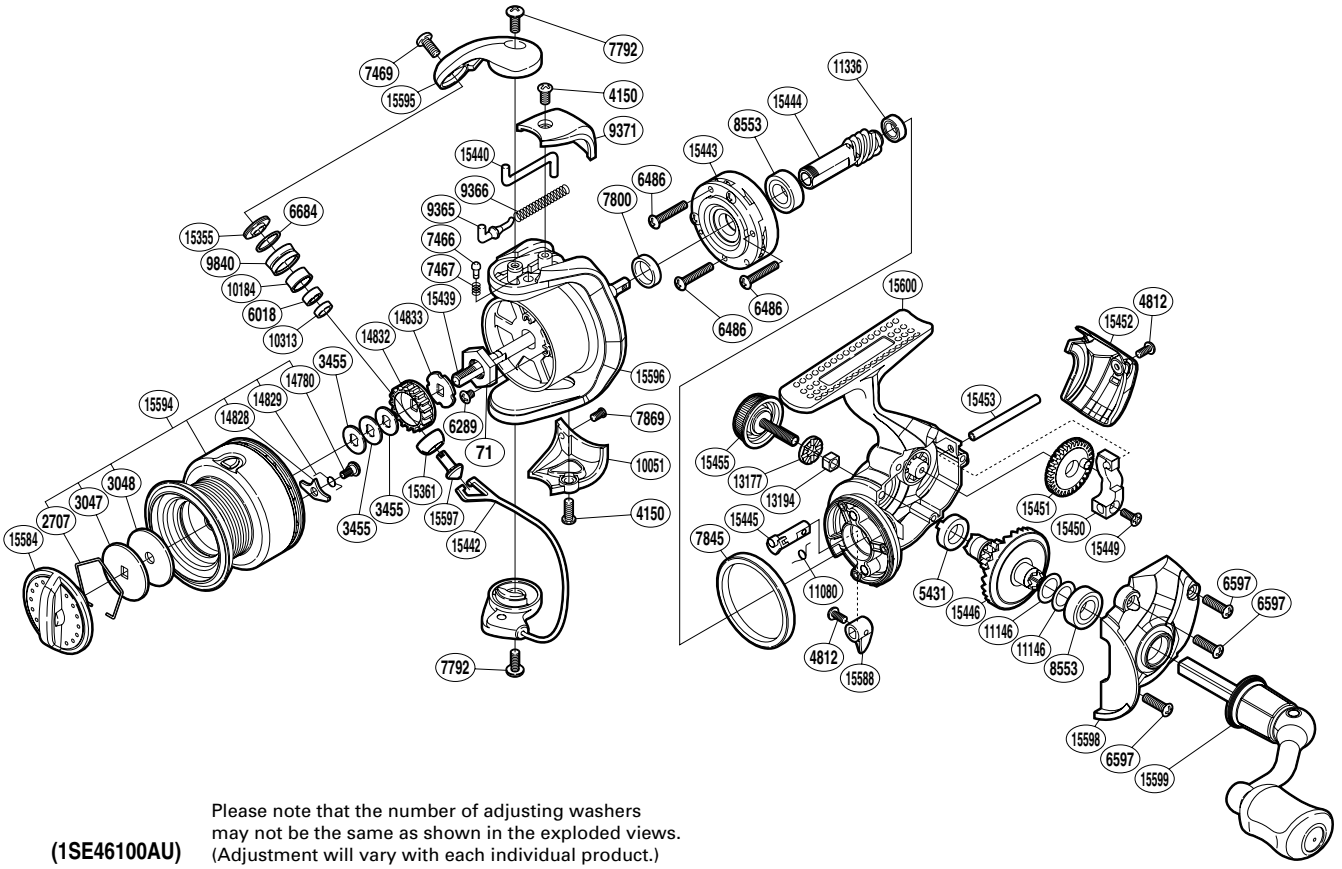

(1SE46100AU)

Please note that the number of adjusting washers may not be the same as shown in the exploded views. (Adjustment will vary with each individual product.)

Part No.	Description	Part No.	Description	Part No.	Description
RD 0071	Rotor Nut	RD 9365	Bail Spring Guide	RD15442	Bail Assembly
RD 2707	Drag Washers Retainer	RD 9366	Bail Spring	RD15443	Roller Clutch Assembly
RD 3047	Key Washer	RD 9371	Bail Spring Cover	RD15444	Pinion Gear
RD 3048	Drag Washer	RD 9840	Line Roller	RD15445	Anti-Reverse Cam
RD 3455	Spool Washer	RD10051	Bail Hold Support Guard	RD15446	Drive Gear
RD 4150	Screw	RD10184	Line Roller Bushing	RD15449	Screw
RD 4812	Screw	RD10313	Bearing Spacer	RD15450	Oscillating Slider
RD 5431	Drive Gear Bushing	RD11080	Anti-Reverse Cam Spring	RD15451	Oscillating Gear
RD 6018	Ball Bearing	RD11146	Washer	RD15452	Rear Protector
RD 6289	Screw	RD11336	Ball Bearing	RD15453	Oscillating Guide
RD 6486	Screw	RD13177	Handle Screw Cap Spacer	RD15455	Handle Screw Cap
RD 6597	Screw	RD13194	Handle Screw Lock	RD15584	Drag Knob
RD 6684	Line Roller Spacer	RD14780	Screw	RD15588	Anti-Reverse Lever
RD 7466	Click Pin	RD14828	Drag Click	RD15594	Spool Assembly
RD 7467	Click Spring	RD14829	Drag Click Spring	RD15595	Bail Arm
RD 7469	Screw	RD14832	Spool Support A	RD15596	Rotor
RD 7792	Screw	RD14833	Spool Support B	RD15597	Line Roller Support
RD 7800	Rotor Ring	RD15355	Line Roller Washer	RD15598	Side Cover
RD 7845	Friction Ring	RD15361	Line Roller Support Cover	RD15599	Handle Assembly
RD 7869	Screw	RD15439	Main Shaft	RD15600	Body
RD 8553	Ball Bearing	RD15440	Bail Trip Lever		