SHIMANO

SYMETRE SA-RB

SY-4000FJ

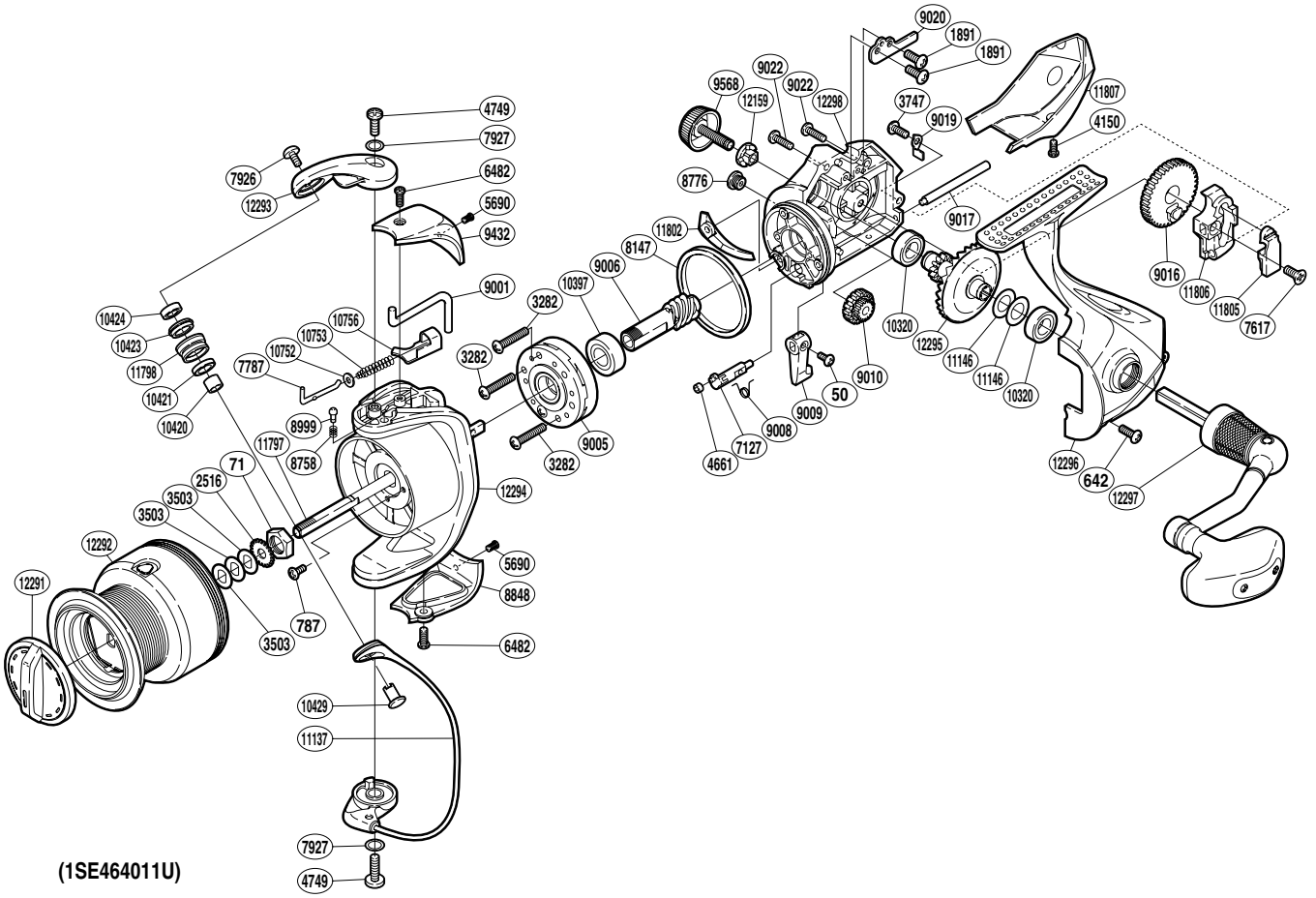

(1SE464011U)

Part No.	Description	Part No.	Description	Part No.	Description
RD 0050	Screw	RD 8848	Bail Hold Support Guard	RD10752	Spring Guide A Support
RD 0071	Rotor Nut	RD 8999	Click Pin	RD10753	Bail Spring
RD 0642	Screw	RD 9001	Bail Trip Lever	RD10756	Bail Spring Seat
RD 0787	Screw	RD 9005	Roller Clutch Assembly	RD11137	Bail Assembly
RD 1891	Screw	RD 9006	Pinion Gear	RD11146	Washer
RD 2516	Spool Support	RD 9008	Anti-Reverse Cam Spring	RD11797	Main Shaft
RD 3282	Screw	RD 9009	Anti-Reverse Lever	RD11798	Line Roller
RD 3503	Spool Washer	RD 9010	Idle Gear	RD11802	Bail Trip Strike
RD 3747	Screw	RD 9016	Oscillating Gear	RD11805	Oscillating Slider Inner
RD 4150	Screw	RD 9017	Oscillating Guide	RD11806	Oscillating Slider
RD 4661	Anti-Reverse Cam Ring	RD 9019	Oscillating Guide Retainer	RD11807	Rear Protector
RD 4749	Screw	RD 9020	Oscillating Guide Plate	RD12159	Handle Screw Lock Washer
RD 5690	Screw	RD 9022	Screw	RD12291	Drag Knob
RD 6482	Screw	RD 9432	Bail Spring Cover	RD12292	Spool Assembly
RD 7127	Anti-Reverse Cam	RD 9568	Handle Screw Cap	RD12293	Bail Arm
RD 7617	Screw	RD10320	Ball Bearing	RD12294	Rotor
RD 7787	Bail Spring Guide A	RD10397	Ball Bearing	RD12295	Drive Gear
RD 7926	Screw	RD10420	Bearing Spacer	RD12296	Side Cover
RD 7927	Washer	RD10421	Line Roller Collar	RD12297	Handle Assembly
RD 8147	Friction Ring	RD10423	Line Roller Bushing	RD12298	Body
RD 8758	Click Spring	RD10424	Ball Bearing		
RD 8776	Oil Cap	RD10429	Line Roller Support		