SHIMANO® 2004 Reel Repair Supplement

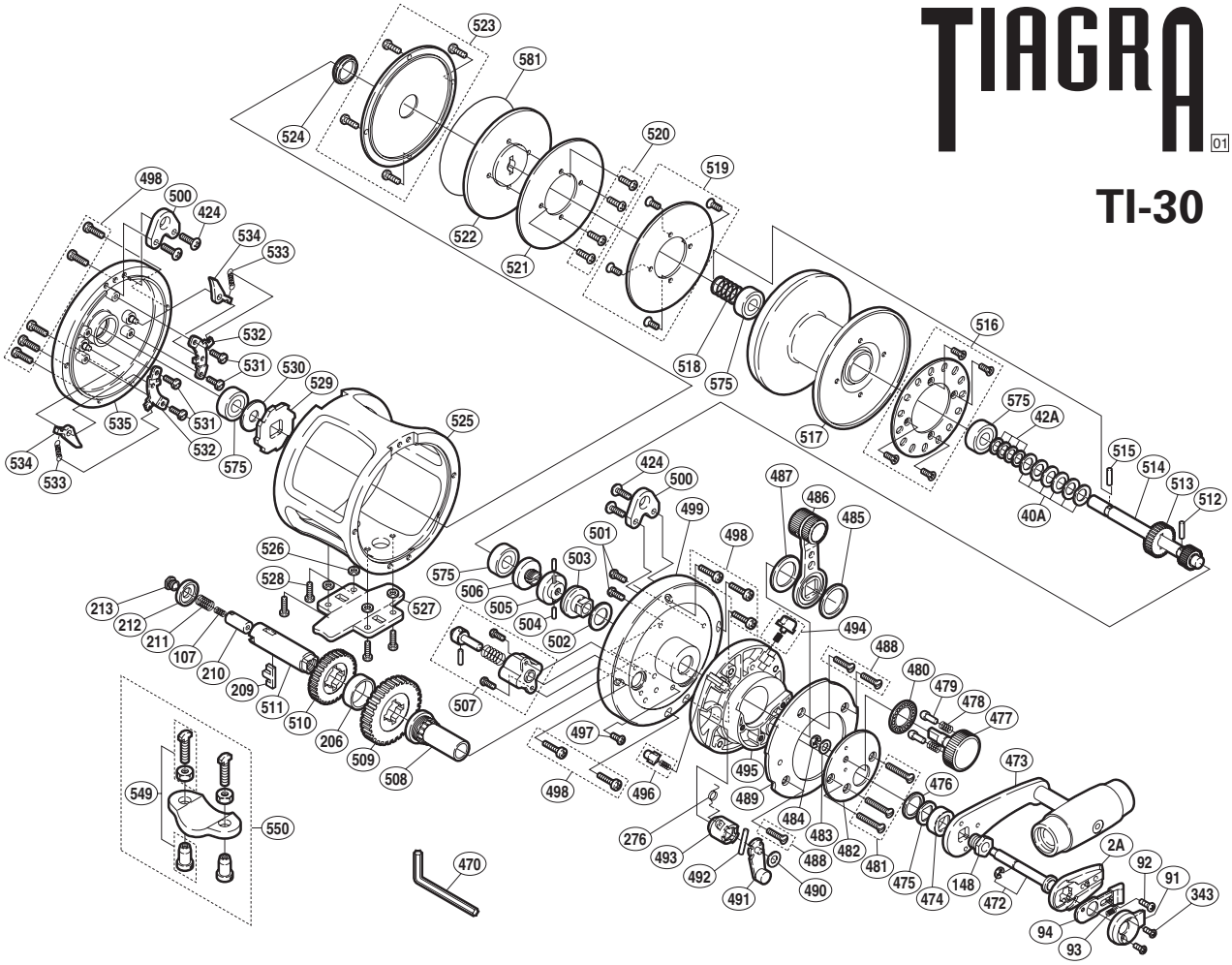

Part No.	Description	Part No.	Description	Part No.	Description
TT 0002A	Handle Bolt Plate	TT 0484	“E” Lock	TT 0514	Pinion Shaft
TT 0040A	Pre-Load Spring	TT 0485	Lever Thrust Ring (B)	TT 0515	Cross Pin (B)
TT 0042A	Bearing Thrust Washer	TT 0486	Drag Control Lever	TT 0516	Alert Ratchet
TT 0091	Push Button Shield	TT 0487	Lever Thrust Ring (A)	TT 0517	Spool
TT 0092	Handle Bolt Plate Screw	TT 0488	Quadrant Anchor Bolts	TT 0518	Pressure Plate Spring
TT 0093	Slide Plate Spring	TT 0489	Lever Quadrant	TT 0519	Drag Plate
TT 0094	Slide Plate	TT 0490	Spacer	TT 0520	Drag Washer Screws
TT 0107	Drive Shaft Spring “B”	TT 0491	Strike Alert Lever	TT 0521	Drag Washer
TT 0148	Handle Bolt	TT 0492	Plunger Cross Pin (B)	TT 0522	Pressure Plate
TT 0206	Friction Washer (C)	TT 0493	Plunger Cross Pin Support	TT 0523	Cooling Shield
TT 0209	Gear Select Cross Bar	TT 0494	Strike Stop	TT 0524	Waterproof Ring
TT 0210	Cross Bar Stop	TT 0495	Right Side Plate (B)	TT 0525	One-Piece Frame
TT 0211	Drive Shaft Spring	TT 0496	Free Spool Detent	TT 0526	Stand Washer
TT 0212	Friction Washer (A)	TT 0497	Drive Shaft Holder Screw	TT 0527	Stand
TT 0213	Drive Shaft Screw	TT 0498	Side Plate Screws	TT 0528	Stand Screw
TT 0276	Cross Pin Support Spring	TT 0499	Right Side Plate (A)	TT 0529	Anti-Reverse Ratchet
TT 0343	Push Button Shield Screw	TT 0500	Harness Lugs	TT 0530	Bearing Spacer
TT 0424	Harness Lug Screw	TT 0501	Right Side Plate (B) Screw	TT 0531	Set Plate Screw
TT 0472	Push “Low” Button Shaft	TT 0502	Lever Shaft Body Washer	TT 0532	Set Plate
TT 0473	Handle Assembly	TT 0503	Lever Shaft Body	TT 0533	Dog Spring
TT 0474	Drive Shaft Shield	TT 0504	Pre-Program Key Pin	TT 0534	Dog
TT 0475	Drive Shaft Thrust Washer	TT 0505	Pre-Program Key	TT 0535	Left Side Plate
TT 0476	Bearing Spacer	TT 0506	Pre-Program Screw	TT 0575	Ball Bearing
TT 0477	Pre-Program Dial	TT 0507	Alert Plunger Assembly	TT 0581	“O” Ring (A)
TT 0478	Friction Shoe Spring	TT 0508	Drive Shaft Holder		
TT 0479	Dial Click Shoe	TT 0509	Drive Gear (A)		
TT 0480	Dial Click	TT 0510	Drive Gear (B)	TT 0549	Rod Clamp Bolt / Nuts
TT 0481	Cover Screws	TT 0511	Drive Shaft	TT 0550	Rod Clamp Assembly
TT 0482	Lever Hub Cover	TT 0512	Cross Pin (A)		
TT 0483	Dial Washer	TT 0513	Pinion Gear (B)	TT 0470	Wrench