VAN STAAL

VAN STAAL

VRL150B PART DIAGRAM

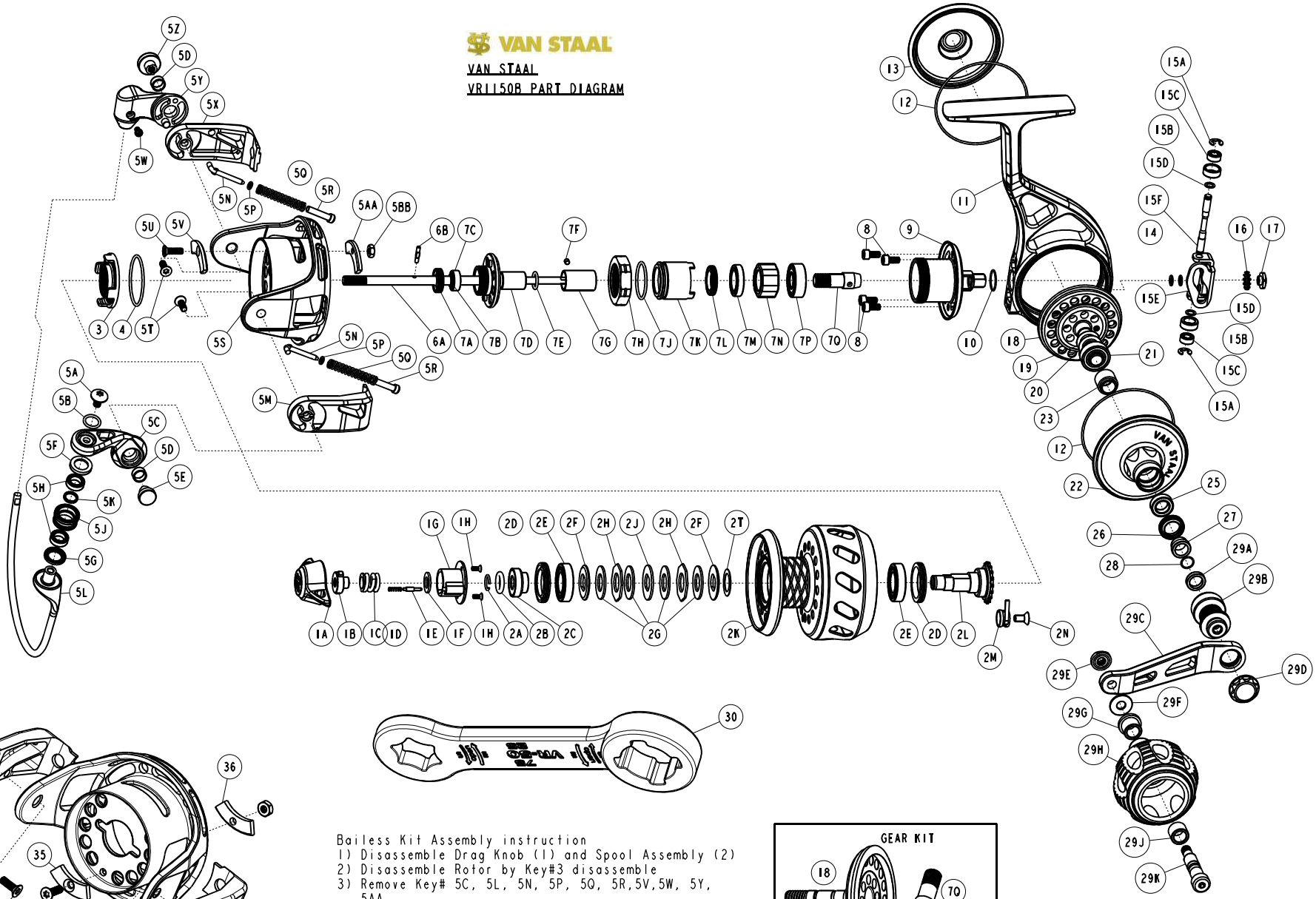

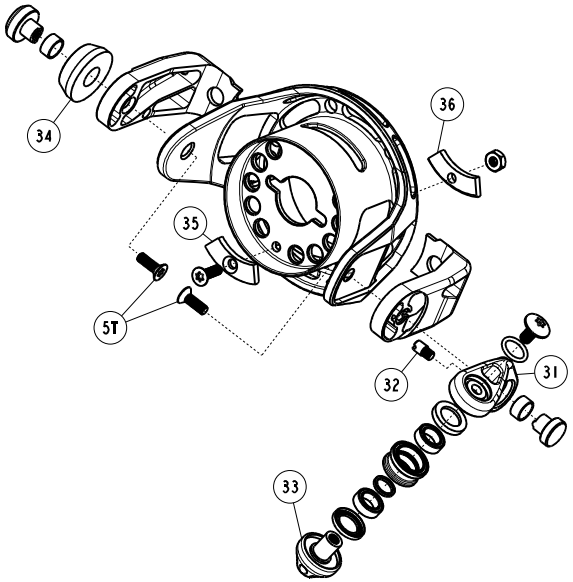

Bailess Kit Assembly instruction

1) Disassemble Drag Knob (1) and Spool Assembly (2)
2) Disassemble Rotor by Key#3 disassemble
3) Remove Key# 5C, 5L, 5N, 5P, 5Q, 5R,5V,5W, 5Y, 5AA,
4) Assemble Key#32 to #31 to Arm Lever Lock
5) Assemble Back using Key# 31 at 5C location, Key# 33 to 5L location, and Key# 34 at 5Y location
6) Assemble #35, #36 opposite Side of Rotor as shown

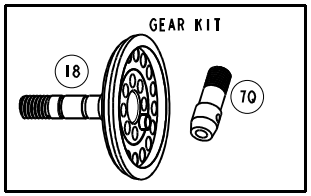

WARNING: Cancer and Reproductive Harm – www.P65Warnings.ca.gov

Van Staal VRII50B Part List

Key No.	Description	Part No. SAP#	Part No. VRII50B	Q'TY	Key No.	Description	Part No. SAP#	Part No. VRII50B	Q'TY
1	Drag Knob Assembly include	1538648	VP332-02	1	7G	Clutch Sleeve	1535336	VP139-01	
	1A - Drag Knob	1538647	VP032-02	1	7H	Lock Ring	1538662	VP122-02	1
	1B - Drag Nut	1535281	VP066-01	1	7J	Clutch Housing O-Ring	1535047	VR164-01	1
	1C - Drag Spring	1535282	VP043-01	1	7K	Clutch Housing	1535339	VP038-01	1
	1D - Drag Click Spring	1535283	VP083-01	1	7L	Main Seal	1535340	VP109-01	1
	1E - Drag Click Pawl	1535089	VS149-01	1	7M	Clutch Support Bearing	1535341	VP202-02	1
	1F - Drag Spring Spacer	1535284	VP065-01	1	7N	One Way Clutch	1535342	VP063-01	1
	1G - Drag Knob Cap	1535285	VP071-01	1	7P	Pinion Gear Ball Bearing	1535343	VP028-02	1
	1H - Drag Knob Cap Screw	1535286	VP057-01	2	8	Body Neck Screw "B"	1535258	VP094-02	4
2	Spool Assembly (Kit) include	1646333	VP321-11	1	9	Body Neck Assembly	1538663	VP341-02	1
	2A - Spool Retainer Ring	1534634	SR1041	1	10	Body Neck O-Ring	1535260	VP105-01	1
	2B - Spool Retainer O-Ring	1534516	ORR10	1	11	Body	1557475	VP001-11	1
	2C - Spool Retainer	1535137	VSB1024-B	1	12	Body Cover O-Ring	1535261	VP145-01	2
	2D - Drag Seal	1534532	OSPR6	2	13	Service Cover	1538665	VP024-02	1
	2E - Spool Ball Bearing	1535299	EA117-02	2	14	Spool Shaft Spacer	1535263	VP026-01	2
	2F - Drag "D" Washer - Chamfered	1534630	SR1036	2	15	O/S Slider Assembly (Kit) include	1535264	VP4025-01	1
	2G - Drag Disc	1534632	SR1038-1	4		15A - E-Clip	1534512	NX092-01	2
	2H - Drag Octagon Washer	1534633	SR1039	2		15B - O/S Slider Bearing Ware Ring	1535277	VP106-01	2
	2J - Drag "D" Washer	1534631	SR1037	1		15C - O/S Slider Bearing	1535278	GX017-02	2
	2K - Spool	1646339	VP021-11	1		15D - O/S Slider Bearing Spacer	1535007	VR029-01	2
	2L - Spool Hub	1646344	VP213-02	1		15E - O/S Slider (or Sub Assembly)	1535461	VP325-01	1
	2M - Clicker Sub Assembly	1605970	SR1058-2	1		15F - O/S Slider Bearing Shaft	1535279	VP115-01	1
	2N - Flat Socket Head Screw	1534543	SCFH2	1	16	Teeth Washer	1535265	VP142-01	1
3	Rotor Nut	1538650	VP006-02	1	17	Hex Nut	1535266	VP014-01	1
4	Rotor Nut O-Ring	1535254	VS105-01	1		Gear Kit	1553414	VP4312-21	1
5	Rotor Assembly (Kit) include	1646346	VP4009-06	1		18 - Drive Gear Assembly			
	5A - Line Slider Screw	1535309	VP108-01	1		7Q - Pinion Gear			
	5B - Line Slider Screw O-Ring	1535033	VR098-01	1	19	Drive Gear Adjust Washer	1535268	AAA110-02	0
	5C - Bail Arm Lever	1538686	VP007-04	1	20	Drive Gear Adjust Washer	1535269	AAA110-03	0
	5D - Arm Lever Bushing	1535313	VP158-01	2	21	Gear Bearing	1535270	CH028-06	1
	5E - Arm Lever Cap	1538653	VP113-02	1	22	Body Cover	1538666	VP023-02	1
	5F - Line Roller Seal "B"	1646350	VP262-10	1	23	Gear Shaft Support Bushing	1558224	VP167-01	1
	5G - Line Roller Seal "A"	1646349	VP262-01	1	25	Body Cover Ball Bearing	1535272	VR028-02	1
	5H - Line Roller Ball Bearing	1538680	CT157-09	2	26	Gear Shaft Seal	1535273	VP252-01	1
	5J - Line Roller	1646351	VP004-20	1	27	Handle Sleeve	1535274	VP110-01	1
	5K - Bearing Spacer	1538681	VP160-01	1	28	Handle Sleeve O-Ring	1535275	VP164-01	1
	5L - Bail Arm	1646353	VP047-11	1	29	Handle Assembly include	1646361	VP318-11	1
	5M - Bail Spring Cover Support (A, B for RH)	1538656	VP087-02	1		29A - Handle Stand Insert	1535287	VP161-01	1
	5N - Bail Spring Link	1535321	VP095-01	1		29B - Handle Stand	1538668	VP058-02	1
	5P - Bail Spring Spacer	1535014	VR048-01	1		29C - Handle Arm	1646365	VP018-11	1
	5Q - Bail Spring	1535002	VR022-01	1		29D - Handle Cap	1538670	VP054-02	1
	5R - Bail Spring Pivot	1535322	VP096-01	1		29E - Handle Knob Bolt Nut	1646442	VR168-11	1
	5S - Rotor	1538657	VP009-02	1		29F - Handle Knob Washer	1534644	SR1078	1
	5T - Bail Spring Cover Screw	1535324	VP085-01	2		29G - Flanged Bushing	1534629	SR1030	1
	5U - Counter Weight Screw	1535325	VP051-01	1		29H - Handle Knob	1596546	SR1208-11	1
	5V - Counder Weight "Top"	1535326	VP148-01	1		29J - Plain Bushing	1534628	SR1029	1
	5W - Bail Holder Screw	1535017	VR051-01	1		29K - Handle Knob Shaft	1564470	VSA005-01	1
	5X - Bail Spring Cover Support (B, A for RH)	1558132	VP087-52	1					
	5Y - Bail Holder	1646357	VP017-21	1					
	5Z - Bail Holder Cap	1535329	VP113-10	1	30	Wrench - Service	1535358	VP170-01	1
	5AA - Counder Weight "Bottom"	1535310	VP148-10	1					
	5BB - Counter Weight Screw Nut	1535311	VP168-01	1					
6	Spool Shaft Assembly (Kit) include	1535256	VP315-01	1		Bailess Kit	1538689	VP4007-13	1
	6A - Spool Shaft	1535330	VP015-01	1	31	Bailess Arm Lever with Locking Screw	1538690	VP007-13	1
	6B - Spool Shaft Pin	1535331	VP134-01	1	32	Arm Lever Locking Screw		VR085-10	1
7A	Spool Shaft Guide Seal	1535332	VP045-01	1	33	Bailess Line Slider	1538691	VP010-13	1
7B	Spool Shaft Bearing Bushing	1535333	VP259-01	1	34	Bailess Counter Weight		VP017-10	1
7C	Spool Shaft Bearing	1535248	SW017-05	1	5T	Arm Lever Cap Screw	1535324	VP085-01	2
7D	Spool Shaft Guide Assembly	1538661	VP375-02	1	35	Counter Weight Top - Bailess		VP148-20	1
7E	Spool Shaft Guide O-Ring	1535033	VR098-01	1	36	Counter Weight Bottom - Bailess		VP148-30	1
7F	Clutch Sleeve Pin	1535335	VP114-01	1					