VAN STAAL

VAN STAAL
VR50 PART DIAGRAM

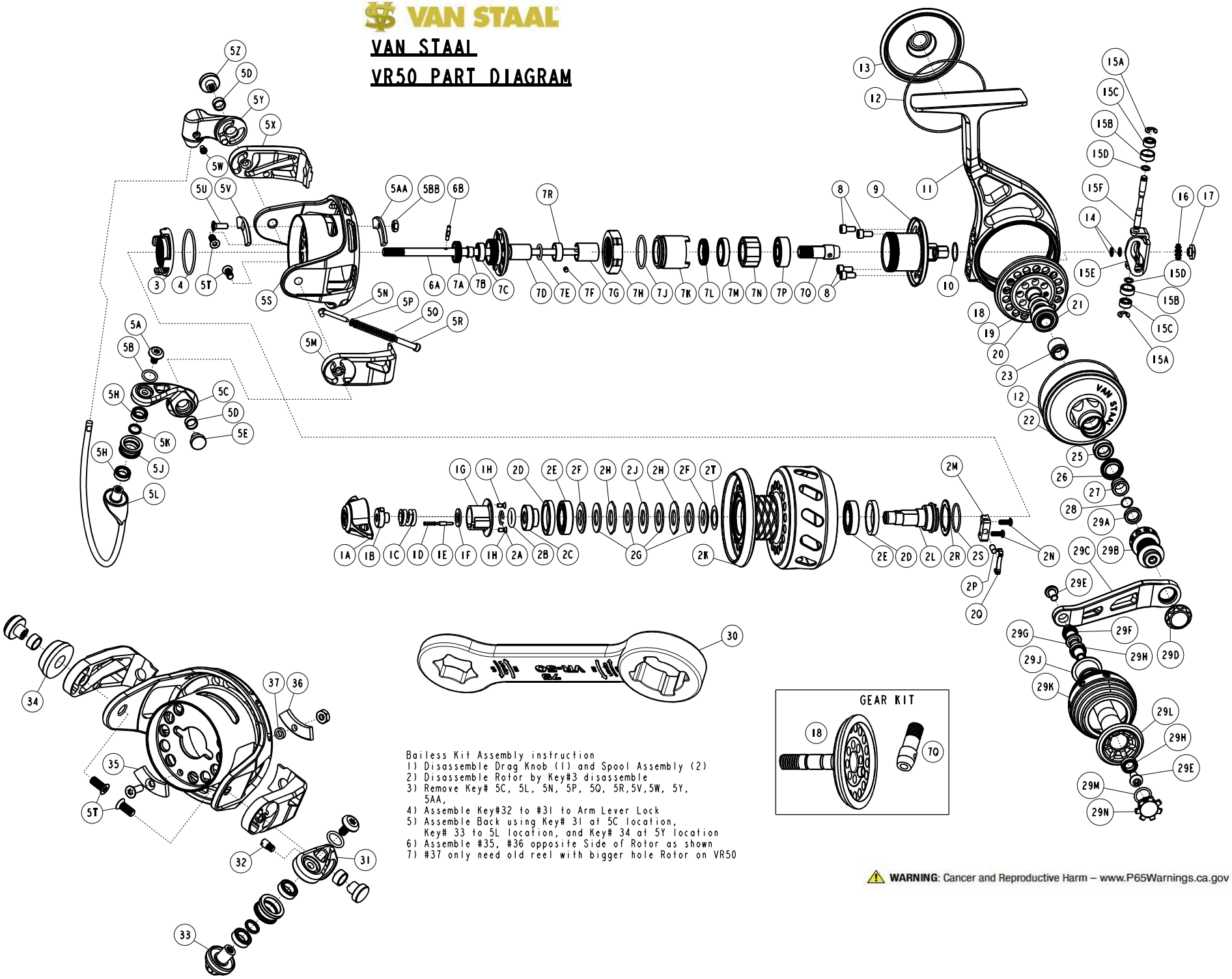

Bailess Kit Assembly instruction
1) Disassemble Drag Knob (1) and Spool Assembly (2)
2) Disassemble Rotor by Key#3 disassemble
3) Remove Key# 5C, 5L, 5N, 5P, 5Q, 5R,5V,5W, 5Y, 5AA,
4) Assemble Key#32 to #31 to Arm Lever Lock
5) Assemble Back using Key# 31 at 5C location, Key# 33 to 5L location, and Key# 34 at 5Y location
6) Assemble #35, #36 opposite Side of Rotor as shown
7) #37 only need old reel with bigger hole Rotor on VR50

WARNING: Cancer and Reproductive Harm – www.P65Warnings.ca.gov

Van Staal VR50 Part List

Key No.	Description	Part No. SAP#	Part No. VR50	Q'TY
1	Drag Knob Assembly include	1535252	VP332-01	1
	1A - Drag Knob	1535280	VP032-01	1
	1B - Drag Nut	1535281	VP066-01	1
	1C - Drag Spring	1535282	VP043-01	1
	1D - Drag Click Spring	1535283	VP083-01	1
	1E - Drag Click Pawl	1535089	VS149-01	1
	1F - Drag Spring Spacer	1535284	VP065-01	1
	1G - Drag Knob Cap	1535285	VP071-01	1
	1H - Drag Knob Cap Screw	1535286	VP057-01	2
2	Spool Assembly (Kit) include	1535252	VP321-01	1
	2A - Spool Retainer Ring	1534634	SR1041	1
	2B - Spool Retainer O-Ring	1534516	ORR10	1
	2C - Spool Retainer	1535137	VSB1024-B	1
	2D - Drag Seal	1535465	VR252-01	2
	2E - Spool Ball Bearing	1535299	EA117-02	2
	2F - Drag "D" Washer - Chamfered	1534630	SR1036	2
	2G - Drag Disc	1534632	SR1038-1	4
	2H - Drag Key Washer	1534633	SR1039	2
	2J - Drag "D" Washer	1534631	SR1037	1
	2K - Spool	1535301	VP021-01	1
	2L - Spool Hub	1535302	VP213-01	1
	2M - Spool Click Base	1535303	VP204-01	1
	2N - Spool Click Base Screw	1535304	AT136-02	2
	2P - Spool Click Pawl	1535305	VP103-01	1
	2Q - Spool Click Spring	1535306	VP049-01	1
	2R - Spool Click Ratchet	1535307	VP037-01	1
	2S - Spool Click Ratchet Retainer	1535308	VP036-01	1
	2T - Washer	1535250	ZW032-05	1
3	Rotor Nut	1535253	VP006-01	1
4	Rotor Nut O-Ring	1535254	VS105-01	1
5	Rotor Assembly (Kit) include	1538676	VP4009-03	1
	5A - Line Slider Screw	1535309	VP108-01	1
	5B - Line Slider Screw O-Ring	1535033	VR098-01	1
	5C - Bail Arm Lever	1538677	VP007-03	1
	5D - Arm Lever Bushing	1535313	VP158-01	2
	5E - Arm Lever Cap	1535314	VP113-01	1
	5F - Arm Lever O-Ring		N/A	N/A
	5G - Line Roller Spacer "A"		N/A	N/A
	5H - Line Roller Ball Bearing	1538680	CT157-09	2
	5J - Line Roller	1538654	VP004-10	1
	5K - Bearing Spacer	1538681	VP160-01	1
	5L - Bail Assembly	1538678	VP347-03	1
	5M - Bail Spring Cover Support	1535320	VP087-01	1
	5N - Bail Spring Link	1535321	VP095-01	1
	5P - Bail Spring Spacer	1535014	VR048-01	1
	5Q - Bail Spring	1535002	VR022-01	1
	5R - Bail Spring Pivot	1535322	VP096-01	1
	5S - Rotor	1535323	VP009-01	1
	5T - Bail Spring Cover Screw	1535324	VP085-01	2
	5U - Counter Weight Screw	1535325	VP051-01	1
	5V - Counder Weight "Top"	1535326	VP148-01	1
	5W - Bail Holder Screw	1535017	VR051-01	1
	5X - Bail Spring Cover Support	1535320	VP087-01	1
	5Y - Bail Holder	1535328	VP017-01	1
	5Z - Bail Holder Cap	1535329	VP113-10	1
	5AA - Counder Weight "Bottom"	1535310	VP148-10	1
	5BB - Counter Weight Screw Nut	1535311	VP168-01	1
6	Spool Shaft Assembly (Kit) include	1535256	VP315-01	1
	6A - Spool Shaft	1535330	VP015-01	1
	6B - Spool Shaft Pin	1535331	VP134-01	1
7A	Spool Shaft Guide Seal	1535332	VP045-01	1
7B	Spool Shaft Bearing Bushing	1535333	VP259-01	1
7C	Spool Shaft Bearing	1535248	SW017-05	1
7D	Spool Shaft Guide Assembly	1535334	VP375-01	1
7E	Spool Shaft Guide O-Ring	1535033	VR098-01	1

Key No.	Description	Part No. SAP#	Part No. VR50	Q'TY
7F	Clutch Sleeve Pin	1535335	VP114-01	1
7G	Clutch Sleeve	1558122	VP052-01	1
7H	Lock Ring	1535337	VP122-01	1
7J	Clutch Housing O-Ring	1535338	VP101-01	1
7K	Clutch Housing	1535339	VP038-01	1
7L	Main Seal	1535340	VP109-01	1
7M	Clutch Support Bearing	1535341	VP202-02	1
7N	One Way Clutch	1535342	VP063-01	1
7P	Pinion Gear Ball Bearing	1535343	VP028-02	1
7R	Spacer Bushing	1558138	VP260-01	1
8	Body Neck Screw "B"	1535258	VP094-02	4
9	Body Neck Assembly	1535259	VP341-01	1
10	Body Neck O-Ring	1535260	VP105-01	1
11	Body	1606178	VP001-10	1
12	Body Cover O-Ring	1535261	VP145-01	2
13	Service Cover	1535262	VP024-01	1
14	Spool Shaft Spacer	1535263	VP026-01	2
15	O/S Slider Assembly (Kit) include	1535264	VP4025-01	1
	15A - E-Clip	1534512	NX092-01	2
	15B - O/S Slider Bearing Ware Ring	1535277	VP106-01	2
	15C - O/S Slider Bearing	1535278	GX017-02	2
	15D - O/S Slider Bearing Spacer	1535007	VR029-01	2
	15E - O/S Slider Sub Assembly	1535461	VP325-01	1
	15F - O/S Slider Bearing Shaft	1535279	VP115-01	1
16	Teeth Washer	1535265	VP142-01	1
17	Hex Nut	1535266	VP014-01	1
	Gear Kit	1553414	VP4312-21	1
	18 - Drive Gear Assembly			
	7Q - Pinion Gear			
19	Drive Gear Adjust Washer	1535268	AAA110-02	0
20	Drive Gear Adjust Washer	1535269	AAA110-03	0
21	Gear Bearing	1535270	CH028-06	1
22	Body Cover	1535271	VP023-01	1
23	Gear Shaft Support Bushing	1558224	VP167-01	1
25	Body Cover Ball Bearing	1535272	VR028-02	1
26	Gear Shaft Seal	1535273	VP252-01	1
27	Handle Sleeve	1535274	VP110-01	1
28	Handle Sleeve O-Ring	1535275	VP164-01	1
29	Handle Assembly include	1535276	VP318-01	1
	29A - Handle Stand Insert	1535287	VP161-01	1
	29B - Handle Stand	1535288	VP058-01	1
	29C - Handle Arm	1535289	VP018-01	1
	29D - Handle Cap	1562715	VP054-01	1
	29E - Handle Knob Screw	1535291	VP077-01	2
	29F - Handle Knob Shaft	1535292	VP005-01	1
	29G - Handle Knob Seal	1535293	VP253-01	1
	29H - Handle Knob Ball Bearing	1553416	CT157-06	2
	29J - Handle Knob Nut	1535294	VP222-01	1
	29K - Handle Knob	1535295	VP013-01	1
	29L - Handle Knob Hub	1535296	VP003-01	1
	29M - Handle Knob Cap O-Ring	1535091	VS164-01	1
	29N - Handle Knob Cap	1535297	VP073-01	1
30	Wrench - Service	1535358	VP170-01	1
	Bailess Kit	1538682	VP4007-12	1
31	Bailess Arm Lever	1538683	VP007-12	1
32	Arm Lever Locking Screw		VR085-10	1
33	Bailess Line Slider	1538684	VP010-12	1
34	Bailess Counter Weight		VP017-10	1
5T	Arm Lever Cap Screw	1535324	VP085-01	2
35	Counter Weight Top - Bailess		VP148-20	1
37	Spacer	1556214	VP091-01	1
36	Counter Weight Bottom - Bailess		VP148-30	1